cowan dynamics

Actuation Solutions and Systems for the
World's Most Challenging Environments

Taking spring return actuation to the next level.

AS SERIES

Spring-Return Pneumatic Valve Actuator

TECHNICAL BROCHURE

Fail-Close Overview

Spring | High-strength steel for fail-close (shown here) or fail-open operation; Available in thrust up to 72,000 lbs.; Ground Flat for stability

Barrel Seals | Nitrile O-ring standard; High or low temp optional

Piston | 6" to 8" bore: aluminum 6061; 10" bore and larger: steel; Wear bands are standard

Wear-Band | BZ-PTFE for high temp version

Tie-Rod | 6" to10" bore: C12L14; 12" & above: ASTM A311 B

Pedestal Mount | Carbon steel interface; Base plate is machined to suit valve requirement; Optional accessories: Open and close limit switches; Lockouts; Travel stops

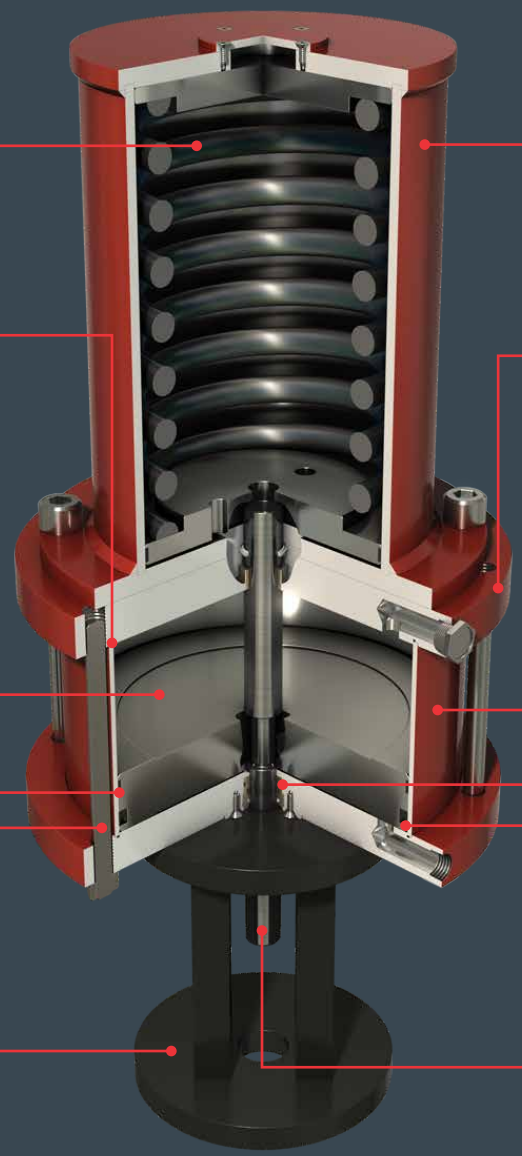

Self-Contained Spring Canister | Spring is pre-compressed and factory-sealed inside a welded steel canister: no extended tie-rods required; Allows safe in-field service of piston packings, rod seals and bushings

Head & Cap | ASTM A-36 hot-rolled steel; stainless steel available as an option

Barrel | High-strength carbon fiber composite standard; aluminum, steel or stainless steel optional

Gland Bushing | Cartridge-type SAE 660 bronze standard; Delrin and cast iron are optional; Nitrile gland packing and urethane wiper are standard; High and low temp optional

Piston Packing | Nitrile U Cups are standard; High and low temp optional

Piston Rod | Steel SAE 1045, ground, hard chrome-plated, and polished 316 chrome-plated stainless steel available as an option

Fail-Open Overview

Flange Cover | Allows access to jam-nut to quickly and safely remove the canister for in-field service; Access for manual override available as an option

Temperature Ratings	
Low-temp seals	-54C to 90C
High-temp seals	-10C to 200C
Standard seals	-20C to 104C

Material Breakdown		
	AS	ASC
Head & Cap	A-36 hot rolled steel	Stainless-steel 316
Barrel	Composite	Composite
Piston 6-8"	Aluminum	Aluminum
Piston 10" & above	Mild Steel	Mild Steel
Piston Rod	1045	Stainless-steel 316
Gland	SAE 660	Delrin
Tie Rod 6"-10"	C12L14	Stainless-steel 316
Tie Rod 12" & above	ASTM A311B	Stainless-steel 17-4

Gland Seal Options

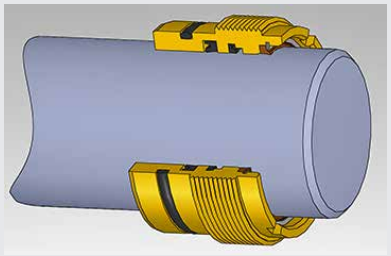

GT3 Gland for Harsh Environments
Triple-seal gland with dual wipers
Rugged metallic scrapper and urethane double-acting wiper deflect contamination away from the rod seal for long service life

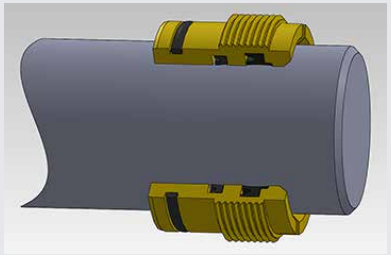

Standard Gland
Nitrile gland packing and urethane wiper are standard; low-temp option is available

Single-Acting Hydraulic Manual Override

Overview and Operation

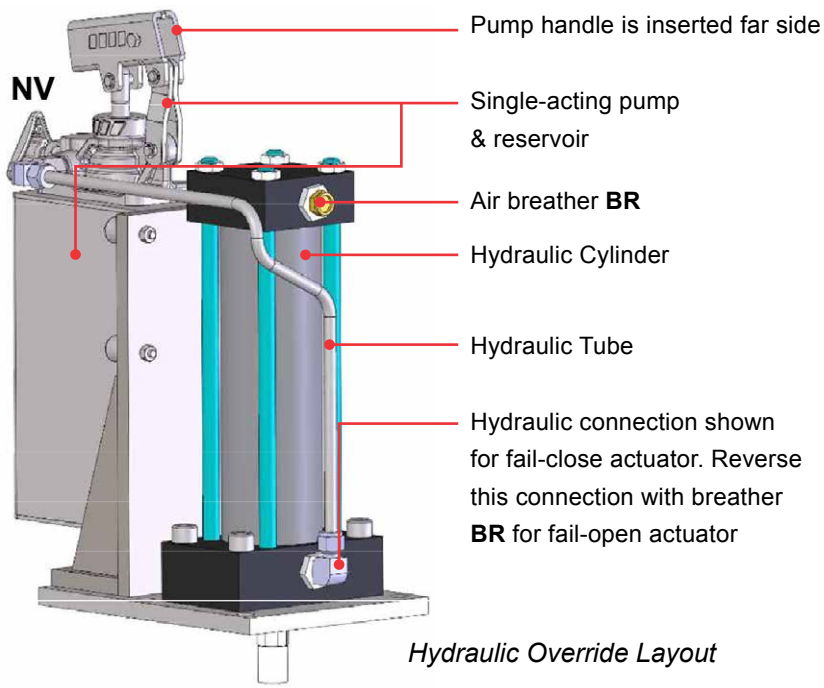

Hydraulic Override Layout

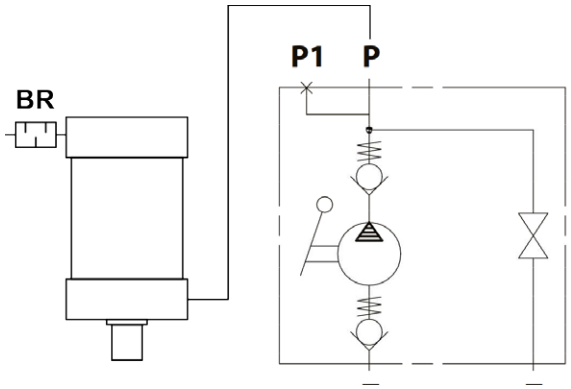

Hydraulic Schematic

OPERATION

Actuator Normal Operation:
Open needle valve **NV** ½ turn to free-wheel the hydraulic override cylinder (cylinder pulls and pushes oil from and to the hydraulic reservoir freely)

Actuator Override Operation:
1. Fully close needle valve NV
2. Insert pump actuation handle and operate, pump operates during both handle strokes
3. Return to normal operation by opening ½ turn needle valve NV

IMPORTANT: Never close needle valve NV during normal operation

Fail-Close Data

Maximum Stroke (in)	Spring End	Available force @ 60 psi			Available force @ 80 psi			Available force @ 100 psi			Spring
	ETC (lbs)	Bore	BTO (lbs)	ETO (lbs)	Bore	BTO (lbs)	ETO (lbs)	Bore	BTO (lbs)	ETO (lbs)	Canister
2.75	300	6	1,282	523	6	1,832	1,073	6	2,382	1,622	4
	525	6	1,145	385	6	1,694	935	6	2,244	1,485	4
	750	7	1,620	861	6	1,557	798	6	2,107	1,347	4
	1,180	7	1,482	723	6	1,419	660	6	1,969	1,210	4
	1,540	7	1,345	586	6	1,282	523	6	1,832	1,072	4
	15,000	20 TC	18,777	15,752	24	17,292	14,267	16 TC	21,251	18,226	12D
	30,000	28 TC	36,069	30,775	24 TC	34,585	29,291	22 TC	37,946	32,652	16
	44,000	36 TC	65,516	57,954	42	55,157	47,594	26 TC	50,484	42,921	22
	58,000	42 TC	92,513	84,951	36 TC	80,607	88,170	42	65,279	57,717	22
	72,000	42 TC	75,402	67,839	42 TC	129,869	122,307	36 TC	110,823	103,261	22
3.75	550	7	1,589	764	7	2,343	1,518	7	3,097	2,272	6
	1,000	7	1,479	654	7	2,233	1,408	7	2,987	2,162	6
	1,513	7	1,369	544	7	2,123	1,298	7	2,877	2,052	6
	2,188	8	1,746	921	7	1,793	968	7	2,547	1,722	6
	3,177	8	1,526	701	7	1,573	748	7	2,327	1,502	6
	16,000	20 TC	17,554	13,429	24	16,070	11,945	16 TC	20,028	15,903	12D
	30,000	28 TC	36,069	28,850	24 TC	34,585	27,366	22 TC	37,946	30,727	16
	43,000	36 TC	66,738	56,426	28 TC	44,425	34,113	26 TC	51,706	41,393	22
	57,000	42 TC	93,735	83,423	32 TC	57,002	46,690	30 TC	69,781	59,468	22
	70,000	42 TC	77,846	67,534	36 TC	73,503	63,191	32 TC	72,781	62,468	22
4.75	820	8	1,966	921	7	2,013	968	7	2,767	1,722	6
	1,090	8	1,636	591	8	2,626	1,581	7	2,437	1,392	6
	1,625	10	2,637	1,330	10	4,178	2,872	8	2,961	1,655	8
	2,188	12	4,023	2,716	10	3,490	2,184	12	8,487	7,181	10
	3,582	14	4,769	3,201	12	4,550	2,983	12	6,783	5,215	10
	16,000	20 TC	17,554	9,560	24	16,070	8,076	22	17,751	9,757	12E
	30,000	28 TC	36,069	26,925	24 TC	34,585	25,441	22 TC	37,946	28,802	16
	42,000	32 TC	43,668	30,606	28 TC	45,648	32,585	26 TC	52,928	39,866	22
	55,000	36 TC	52,072	39,009	32 TC	59,447	46,384	30 TC	72,225	59,163	22
	68,000	42 TC	80,291	67,228	36 TC	75,948	62,885	32 TC	75,225	62,163	22
5.75	3,177	14	5,264	3,366	12	5,045	3,148	12	7,278	5,380	10
	3,582	14	4,769	2,871	12	4,550	2,653	12	6,783	4,885	10
	4,190	16	6,754	4,856	14	7,075	5,177	14	7,278	5,380	12A
	4,676	16	6,160	3,408	14	6,481	2,729	14	9,530	6,778	12B
	5,460	18	5,406	5,654	14	5,522	2,771	14	8,571	5,820	12B

Stated thrust values are based on spring rates determined in accordance with ASTM A-125. Stated thrust values are for standard actuators only, if accessories are added, please consult factory.

Legend - ETO: End-to-Open Thrust BTO: Break-to-Open Thrust ETC (Preload): End-to-Close Thrust

Note - Consult Factory for larger actuators or Thrust values not shown here

Fail-Close Data

Maximum Stroke (in)	Spring End	Available force @ 60 psi			Available force @ 80 psi			Available force @ 100 psi			Spring
	ETC (lbs)	Bore	BTO (lbs)	ETO (lbs)	Bore	BTO (lbs)	ETO (lbs)	Bore	BTO (lbs)	ETO (lbs)	Canister
5.75	17,000	18 TC	19,435	9,757	18 TC	19,435	9,757	16 TC	18,806	9,129	12E
	29,000	28 TC	37,291	21,479	24 TC	35,807	19,994	22 TC	39,168	23,356	16
	41,000	32 TC	44,891	29,078	28 TC	46,870	31,057	26 TC	54,150	38,338	22
	53,000	36 TC	54,516	38,704	32 TC	61,891	46,079	28 TC	56,448	40,636	22
	65,000	42 TC	83,958	68,145	36 TC	79,614	63,802	32 TC	78,892	63,079	22
6.75	1,400	10	2,912	1,056	8	2,247	391	7	2,919	203	8
	2,907	12	3,144	916	12	5,376	3,148	10	4,152	1,925	10
	4,460	16	6,424	4,197	14	6,745	4,518	12	5,710	3,483	12A
	7,380	14 TC	9,274	4,819	18	11,086	6,631	16	10,772	6,317	12C
	11,600	24	12,541	5,116	24	15,667	8,242	14 TC	16,313	8,888	12D
	23,000	24 TC	25,327	13,967	30	27,668	16,308	26	24,020	12,659	12E
	33,000	30 TC	43,335	24,773	36	39,196	20,634	22 TC	34,279	15,717	22
	43,000	36 TC	66,738	48,176	28 TC	44,425	25,863	36	46,856	28,294	22
	53,000	36 TC	54,516	35,954	32 TC	61,891	43,329	28 TC	56,448	37,886	22
	63,000	42 TC	86,402	67,839	36 TC	82,059	63,496	32 TC	81,336	62,774	22
8.75	2,367	12	3,804	916	10	3,271	384	10	4,812	1,925	10
	2,840	14	5,676	2,789	12	5,458	2,570	10	4,234	1,347	10
	4,140	16	6,815	3,928	14	7,136	4,249	12	6,101	3,214	12A
	5,760	18	8,040	3,853	16	4,607	4,607	14	8,205	4,018	12B
	8,900	22	11,506	1,881	14 TC	8,794	3,890	18	14,255	4,630	12D
	19,000	22 TC	21,545	6,819	28	25,268	10,542	24	21,310	6,584	12E
	29,000	28 TC	37,291	13,229	24 TC	35,807	11,744	30	34,279	10,217	22
	39,000	32 TC	47,335	23,273	28 TC	49,314	25,252	24 TC	41,397	17,335	22
	49,000	36 TC	59,405	35,343	30 TC	51,669	27,606	28 TC	61,337	37,275	22
	59,000	42 TC	91,291	67,228	36 TC	86,948	62,885	30 TC	67,336	43,274	22
10.75	3,500	14	4,869	1,322	12	4,651	1,104	12	6,883	3,336	12A
	5,300	18	8,602	3,458	14	5,718	575	14	8,768	3,624	12B
	8,800	24	15,964	4,139	14 TC	13,637	1,812	18	14,377	2,552	12D
	11,554	28	22,246	4,154	24	21,504	3,412	22	23,185	5,093	12E
	14,308	30	24,347	6,254	18 TC	22,725	4,633	22	19,819	1,727	12E
	22,000	24 TC	26,550	5,856	30	28,890	8,196	18 TC	23,377	2,683	16
	30,000	28 TC	36,069	6,506	24 TC	34,585	5,022	30	33,057	3,494	22
	38,000	32 TC	48,557	18,995	28 TC	50,536	20,974	24 TC	42,620	13,057	22
	46,000	36 TC	63,072	33,509	42	52,712	23,150	26 TC	48,039	18,477	22
	54,000	42 TC	97,402	67,839	32 TC	60,669	31,106	28 TC	55,226	25,664	22

Stated thrust values are based on spring rates determined in accordance with ASTM A-125. Stated thrust values are for standard actuators only, if accessories are added, please consult factory.

Legend - ETO: End-to-Open Thrust BTO: Break-to-Open Thrust ETC (Preload): End-to-Close Thrust

Note - Consult Factory for larger actuators or Thrust values not shown here

Fail-Open Data

Maximum Stroke (in)	Spring Start	Spring End	Available Force @ 60 psi			Available Force @ 80 psi			Available Force @ 100 psi			Spring (#)
	BTO (lbs)	ETO (lbs)	Bore	ETC (lbs)	BTC (lbs)	Bore	ETC (lbs)	BTC (lbs)	Bore	ETC (lbs)	BTC (lbs)	Canister
2.75	921	300	6	523	1,283	6	1,073	1,832	6	1,623	2,382	4
	1,146	525	7	861	1,620	6	798	1,557	6	1,348	2,107	4
	1,371	750	8	1,293	2,052	7	1,340	2,099	6	1,073	1,832	4
	1,675	1,180	10	2,576	3,181	8	1,911	2,516	7	1,723	2,328	6
	2,035	1,540	10	2,136	2,741	10	3,677	4,282	8	2,461	3,066	6
	17,475	15,000	30	20,476	23,501	18 TC	18,854	21,879	16 TC	16,226	21,251	12D
	34,331	30,000	42	39,741	45,034	36	37,569	42,863	32	37,208	42,501	16
	50,188	44,000	36 TC	57,954	65,516	30 TC	50,218	57,780	28 TC	59,886	67,448	22
	64,188	58,000	42 TC	84,951	92,513	36 TC	80,607	88,170	32 TC	79,885	87,447	22
	78,188	72,000				42 TC	122,307	129,869	36 TC	103,261	110,823	22
3.75	1,397	550	8	1,261	2,297	7	1,308	2,344	6	1,041	2,077	
	1,675	1,000	10	2,576	3,401	8	1,911	2,736	7	1,723	2,548	6
	2,188	1,513	10	1,949	2,774	10	3,490	4,315	8	2,274	3,099	6
	3,032	2,188	12	2,991	4,023	10	2,459	3,490	10	4,000	5,031	8
	4,190	3,177	14	4,027	5,264	12	3,808	5,046	12	6,041	7,278	10
	19,375	16,000	22 TC	21,087	25,212	28	24,810	28,935	24	20,851	24,976	12D
	35,906	30,000	32	37,816	45,034	36	35,644	42,863	32	35,283	42,501	16
	51,438	43,000	36 TC	56,426	66,738	30 TC	48,690	59,002	28 TC	58,358	68,671	22
	65,438	57,000	36 TC	83,423	93,735	36 TC	79,080	89,392	32 TC	78,357	88,669	22
	78,438	70,000				42 TC	122,001	132,314	36 TC	102,955	113,268	22
4.75	1,675	820	10	2,576	3,621	7	969	2,014	7	1,723	2,768	6
	1,945	1,090	10	2,246	3,291	8	1,581	2,626	7	1,393	2,438	6
	2,694	1,625	12	3,404	4,711	10	2,872	4,178	10	4,413	5,719	8
	3,257	2,188	12	2,716	4,023	12	4,949	6,255	10	3,725	5,031	8
	4,865	3,582	16	5,930	7,497	14	6,251	7,818	12	9,300	10,867	10
	22,541	16,000	32	19,951	27,945	28	20,941	28,935	18 TC	22,716	30,710	12E
	37,481	30,000	30 TC	37,858	47,002	26 TC	37,599	46,743	24 TC	43,254	52,397	16
	52,688	42,000	36 TC	54,898	67,961	32 TC	62,273	62,273	28 TC	56,830	69,893	22
	65,688	55,000	42 TC	83,117	96,180	36 TC	78,774	91,836	32 TC	78,051	91,114	22
	96,180	68,000				42 TC	121,696	134,758	36 TC	102,650	115,712	22
5.75	4,730	3,177	16	6,095	7,992	14	6,416	8,313	12	5,381	7,278	10
	5,135	3,582	16	5,600	7,497	14	5,921	7,818	12	4,886	6,783	10
	5,743	4,190	18	8,061	9,959	14	5,178	7,075	14	8,227	10,124	10
	6,229	4,676	18	7,467	9,365	16	8,221	10,119	14	7,633	9,530	12A
	7,711	5,460	14 TC	8,870	11,621	16	6,409	9,160	16	10,367	13,119	12B

Stated thrust values are based on spring rates determined in accordance with ASTM A-125. Stated thrust values are for standard actuators only, if accessories are added, please consult factory.

Legend - ETO: End-to-Open Thrust BTO: Break-to-Open Thrust ETC (Preload): End-to-Close Thrust

Note - Consult Factory for larger actuators or Thrust values not shown here

Fail-Open Data

Maximum Stroke (in)	Spring Start	Spring End	Available Force @ 60 psi			Available Force @ 80 psi			Available Force @ 100 psi			Spring (#)
	BTO (lbs)	ETO (lbs)	Bore	ETC (lbs)	BTC (lbs)	Bore	ETC (lbs)	BTC (lbs)	Bore	ETC (lbs)	BTC (lbs)	Canister
5.75	24,918	17,000	24 TC	22,983	32,661	30	25,324	35,001	18 TC	19,810	29,488	12E
	37,056	28,000	42	36,410	47,479	36	34,238	45,307	32	33,877	44,946	16
	49,938	37,000	36 TC	58,259	74,072	42	47,900	63,712	26 TC	43,227	59,039	22
	60,938	48,000	42 TC	88,923	104,735	36 TC	84,580	100,392	42	61,689	77,502	22
	71,938	59,000	42 TC	75,478	91,291	36 TC	71,135	86,948	32 TC	70,413	86,225	22
6.75	2,919	1,400	12	3,129	4,986	10	2,597	4,453	10	4,138	5,994	8
	4,730	2,907	16	6,095	8,322	14	6,416	8,643	12	5,381	7,608	10
	6,283	4,460	18	7,401	9,629	16	8,155	10,383	14	7,567	9,794	12A
	11,025	7,380	22	8,909	13,364	14 TC	10,917	15,372	18	11,658	16,113	12C
	17,675	11,600	28	14,765	22,190	24	14,023	21,448	22	15,704	23,129	12D
	28,295	19,000	36	25,065	36,425	22 TC	25,108	36,468	28	26,031	37,391	12E
	38,631	28,000	30 TC	36,452	49,446	26 TC	36,193	49,187	32	31,952	44,946	16
	52,188	37,000	36 TC	55,509	74,072	42	45,150	63,712	28 TC	57,441	76,004	22
	61,188	46,000	42 TC	88,617	107,180	36 TC	84,274	102,836	42	61,384	79,946	22
	70,188	55,000	42 TC	77,617	96,180	36 TC	73,274	91,836	36 TC	113,039	131,601	22
8.75	4,730	2,367	14	3,367	6,254	12	3,148	6,036	12	5,381	8,268	10
	5,203	2,840	16	5,517	8,404	14	5,838	8,725	12	4,803	7,690	10
	6,503	4,140	18	7,132	10,020	16	7,886	10,774	14	7,298	10,185	12A
	9,186	5,760	14 TC	7,067	11,254	18	8,879	13,066	16	8,565	12,752	12B
	16,775	8,900	28	15,865	25,490	16 TC	11,164	20,789	20	10,422	20,047	12D
	31,049	19,000	26 TC	24,608	39,335	32	25,386	40,112	28	22,665	37,391	12E
	47,688	28,000	32 TC	36,717	60,779	28 TC	38,696	62,759	36	41,127	65,189	22
	56,688	37,000	36 TC	50,009	74,072	32 TC	57,384	81,447	28 TC	51,941	76,004	22
	65,688	46,000	42 TC	83,117	107,180	36 TC	78,774	102,836	42	55,884	79,946	22
	74,688	55,000	42 TC	72,117	96,180	36 TC	67,774	91,836	32 TC	67,051	91,114	22
10.75	6,403	3,500	18	7,254	10,802	14	4,371	7,918	14	7,420	10,968	
	9,509	5,300	14 TC	6,673	11,817	18	8,485	13,628	16	8,170	13,314	12B
	18,475	8,800	28	13,787	25,612	24	13,045	24,870	22	14,726	26,551	12D
	26,357	11,554	24 TC	21,225	39,317	28	16,277	34,369	18 TC	18,052	36,144	12E
	29,111	14,308	36	24,067	42,159	30	20,199	38,291	28	25,033	43,125	12E
	38,931	22,000	42	34,118	54,812	36	31,947	52,640	22 TC	27,030	47,724	16
	53,188	29,000	36 TC	54,287	83,850	42	43,928	73,490	26 TC	39,255	68,817	22
	60,188	36,000	42 TC	89,839	119,402	32 TC	53,106	82,669	28 TC	47,664	77,226	22
	67,188	43,000	42 TC	81,284	110,846	36 TC	76,941	106,503	42	54,050	83,613	22
	74,188	50,000	42 TC	72,728	102,291	36 TC	68,385	97,948	32 TC	67,663	97,225	22

Stated thrust values are based on spring rates determined in accordance with ASTM A-125. Stated thrust values are for standard actuators only, if accessories are added, please consult factory.

Legend - ETO: End-to-Open Thrust BTO: Break-to-Open Thrust ETC (Preload): End-to-Close Thrust

Note - Consult Factory for larger actuators or Thrust values not shown here

Actuator Dimensions: Flange Mounting

MX3 Mount

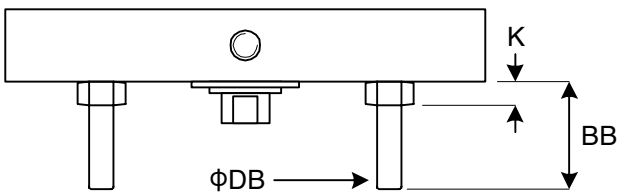

Flange Mount

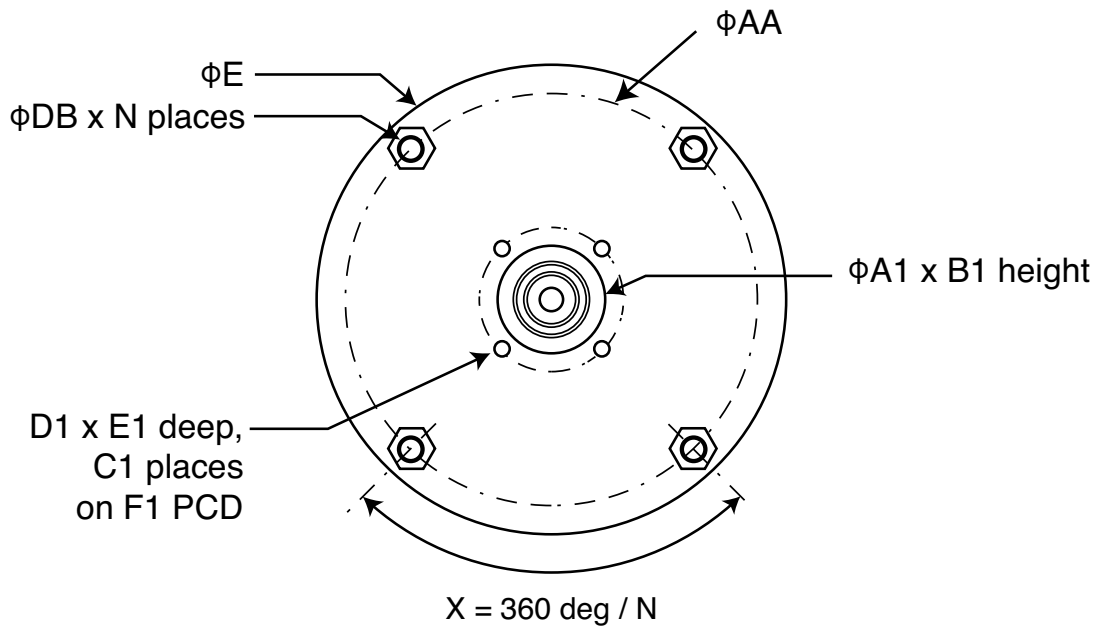

Cylinder Dimensions (in)						
Bore	BB	DB	K	N	E	AA
6	1.81	½-20	0.56	4	8.13	7.00
7	2.31	⅝-18	0.44	4	9.25	8.13
8	2.31	⅝-18	0.44	4	10.38	9.13
10	2.69	¾-16	0.75	4	12.75	11.25
12	2.69	¾-16	0.75	4	15.75	13.38
14 & 14TC	3.19	⅞-14	0.88	4	17.25	15.50
16 & 16TC	3.63	⅞-14	0.88	6	19.88	17.88
18 & 18TC	3.75	⅞-14	0.88	6	22.25	20.00
20 & 20TC	4.00	⅞-14	0.88	10	24.50	22.50
22 & 22TC	4.25	⅞-14	0.88	10	26.50	24.50
24 & 24TC	4.50	⅞-14	0.88	10	28.50	26.50
26 & 26TC	4.50	⅞-14	0.88	12	31.75	28.75
28 & 28TC	4.50	⅞-14	0.88	14	33.63	30.63
30 & 30TC	4.50	⅞-14	0.88	14	35.63	32.63
32 & 32TC	4.75	1⅛-12	1.13	8	37.63	34.63
36 & 36TC	4.75	1⅛-12	1.13	12	40.00	39.03
42 & 42TC	4.75	1⅛-12	1.13	12	50.50	47.50

MSS Flange Mounting Dimensions (in)							
MSS FLANGE	MAX.THRUST (lbs.)	A1	B1	C1	D1	E1	F1
FA07	4,500	2.166	0.120	4	5⁄16-18	11⁄16	2.750
FA10	9,000	2.312	0.120	4	⅜-16	11⁄16	4.000
FA14	25,000	3.750	0.160	4	⅝-11	13⁄16	5.500
FA16	35,000	5.000	0.190	4	¾-10	1⅛	6.500
FA25	50,000	6.000	0.190	8	⅝-11	1⅛	10.000
FA30	75,000	7.000	0.190	8	¾-10	1⅛	11.750
FA35	140,000	8.500	0.190	8	1-8	1¼	14.000
FA40	230,000	9.000	0.320	8	1¼-7	1½	16.000

ISO Flange Mounting Dimensions (in)							
ISO FLANGE	MAX. THRUST (lbs.)	A1	B1	C1	D1	E1	F1
F07	4,495	2.165	0.118	4	M8	7⁄16	2.755
F10	8,990	2.756	0.118	4	M10	⅝	4.016
F14	22,480	3.937	0.157	4	M16	¾	5.512
F16	33,723	5.118	0.197	4	M20	⅞	6.496
F25	44,964	7.874	0.197	8	M16	⅞	10.000
F30	73,066	9.055	0.197	8	M20	⅞	11.732
F35	157,374	10.236	0.197	8	M30	⅞	14.016
F40	247,302	11.811	0.314	8	M36	⅞	15.984

Actuator Dimensions: AS Series Single-Stage

Cylinder Dimensions (in)												Weight (lbs)	
Bore	A	B	E	EE (NPT)	G	LB	H	KK	MM	V	W	BASE	PER-IN
6	1.75	1.50	8.13	¼	1.63	4.50	1.25	⅝-18	1.00	0.25	0.75	53	0.82
7	1.75	1.50	9.25	⅜	1.25	4.00	1.50	⅝-18	1.00	0.25	0.75	55	0.97
8	1.75	1.50	10.38	⅜	1.25	4.00	1.50	⅝-18	1.00	0.25	0.75	69	0.99
10	2.25	2.00	12.75	½	1.25	4.13	1.63	1-14	1.38	0.25	0.88	131	1.73
12	2.25	2.00	15.75	½	1.25	4.50	2.00	1-14	1.38	0.25	0.88	207	1.81
14	2.25	2.00	17.25	½	1.50	5.25	2.25	1-14	1.38	0.25	0.88	304	2.06
16	2.25	2.63	19.88	¾	1.75	5.75	2.25	1¼-12	2.00	0.25	1.13	448	3.65
18	2.25	2.63	22.25	¾	1.75	5.75	2.25	1¼-12	2.00	0.25	1.13	560	3.76
20	2.25	3.13	24.50	¾	2.00	6.50	2.50	1¼-12	2.50	0.25	1.13	778	5.56
22	3.50	3.75	26.50	¾	2.00	7.50	3.50	2¼-12	3.00	0.25	1.25	1,031	7.19
24	3.50	3.75	28.50	¾	2.50	8.50	3.50	2¼-12	3.00	0.25	1.25	1,384	7.33
26	3.50	4.25	31.75	¾	2.50	9.50	4.50	2¼-12	3.50	0.25	1.25	1,841	9.24
28	3.50	4.25	33.63	¾	4.00	13.00	5.00	2¼-12	3.50	0.25	1.25	2,944	9.71
30	3.50	4.25	35.63	¾	4.00	13.00	5.00	2¼-12	3.50	0.25	1.50	3,320	9.85
32	3.50	4.75	37.63	1½	4.00	14.00	6.00	2¾-12	4.00	0.25	1.75	3,879	12.74
36	4.50	6.25	40.00	1½	6.00	20.00	8.00	4-12	5.50	0.25	1.75	7,051	20.62
42	4.50	6.25	50.50	1½	6.00	20.00	8.00	4-12	5.50	0.25	1.75	9,970	21.23

ISO or MSS Mounting Pattern*		
BORE	STD	OPT
6	F/FA07	
7	F/FA07	
8	F/FA10	F/FA07
10	F/FA10	F/FA07
12	F/FA14	F/FA10
14	F/FA14	F/FA10
16	F/FA14	F/FA10
18	F/FA16	F/FA14
20	F/FA16	F/FA14
22	F/FA25	F/FA16
24	F/FA25	F/FA16
26	F/FA30	F/FA25
28	F/FA25	F/FA30
30	F/FA25	F/FA30
32	F/FA30	F/FA35
36	F/FA30	F/FA35
42	F/FA30	F/FA35

* Assembly Weight FAIL CLOSE = Base# + (Per-IN# X STROKE) + FAIL CLOSE#

* Assembly Weight FAIL OPEN = Base# + (Per-IN# X STROKE) + FAIL OPEN#

AS Spring Canister Dimensions (in)							Weight (lbs)	
Canister Bore	CA	CB	CC	CD	CE	CF	FAIL CLOSE	FAIL OPEN
4	16.59	6.00	6.75	5.69	1/2-20	0.38	43	47
6	22.67	8.63	7.25	5.69	1/2-20	0.50	77	87
8	28.04	10.38	9.00	5.69	1/2-20	0.63	145	157
10	34.36	11.75	10.50	5.69	1/2-20	0.63	232	262
12A	43.69	15.75	13.50	9.50	3/4-10	0.88	490	605
12B	44.94	15.75	13.50	9.50	3/4-10	0.88	593	708
12C	43.14	15.75	13.50	9.50	3/4-10	0.88	609	724
12D	52.95	15.75	13.50	9.50	3/4-10	0.88	803	918
12E	62.68	15.75	13.50	9.50	3/4-10	0.88	1,020	1,135
16	56.17	19.75	17.50	13.50	3/4-10	0.88	1,194	1,244
22	80.89	25.75	23.50	19.50	3/4-10	0.88	3,480	3,540

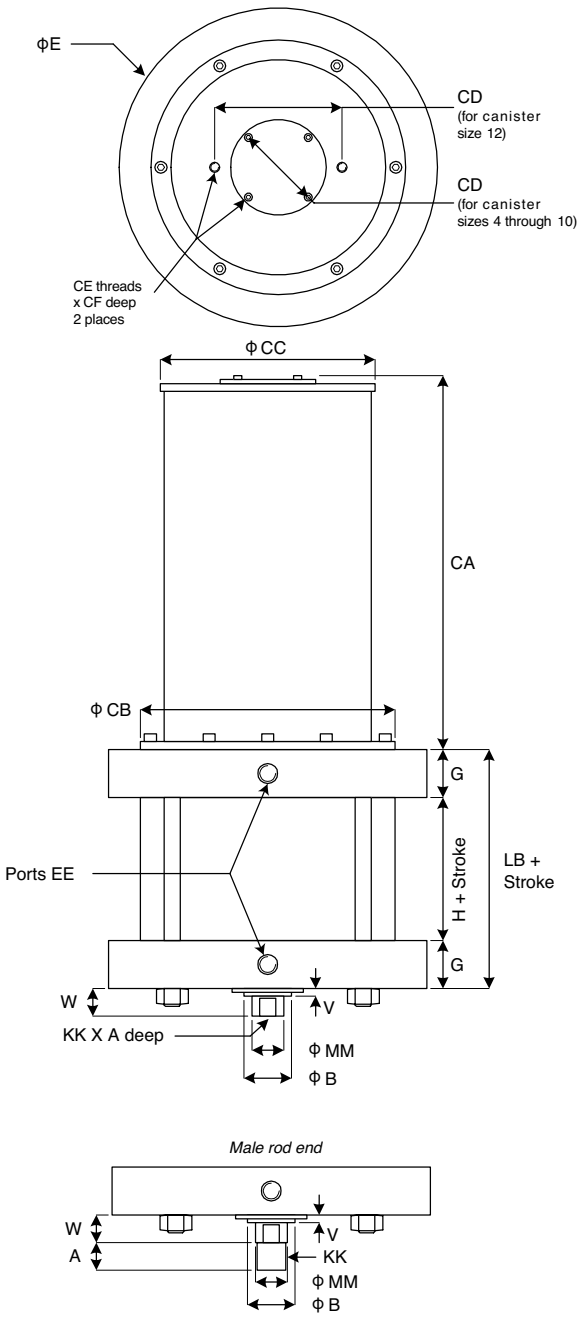

Actuator Dimensions: AS Series Tandem

Tandem Cylinder Dimensions (in)												Weight (lbs)		ISO or MSS Mounting Pattern*	
Bore	A	B	E	EE	G	LB	H	KK	MM	V	W	BASE	PER-IN	STD	OPT
14 TC	2.25	2.00	17.25	½	1.50	9.00	2.25	1-14	1.38	0.25	0.88	506	3.03	F/FA16	F/FA14
16 TC	2.25	2.63	19.88	¾	1.75	9.75	2.25	1¼-12	2.00	0.25	1.13	740	5.4	F/FA25	F/FA16
18 TC	2.25	2.63	22.25	¾	1.75	9.75	2.25	1¼-12	2.00	0.25	1.13	925	5.61	F/FA30	F/FA25
20 TC	2.25	3.13	24.50	¾	2.00	11.00	2.50	1¼-12	2.50	0.25	1.13	1,285	8.04	F/FA30	F/FA25
22TC	3.50	3.75	26.50	¾	2.00	13.00	3.50	2¼-12	3.00	0.25	1.25	1,749	10.69	F/FA30	F/FA25
24TC	3.50	3.75	28.50	¾	2.50	14.50	3.50	2¼-12	3.00	0.25	1.25	2,315	10.96	F/FA35	F/FA30
26 TC	3.50	4.25	31.75	¾	2.50	16.50	4.50	2¼-12	3.50	0.25	1.25	3,125	13.73	F/FA35	F/FA30
28 TC	3.50	4.25	33.63	¾	4.00	22.00	5.00	2¼-12	3.50	0.25	1.25	4,882	14.34	F/FA35	F/FA30
30 TC	3.50	4.25	35.63	¾	4.00	22.00	5.00	2¼-12	3.50	0.25	1.50	5,510	14.61	F/FA35	F/FA30
32 TC	3.50	4.75	37.63	1½	4.00	24.00	6.00	2¾-12	4.00	0.25	1.75	6,457	21.91	F/FA40	F/FA35
36 TC	4.50	6.25	40.00	1½	6.00	34.00	8.00	4-12	5.50	0.25	1.75	11,633	34.14	F/FA40	F/FA35
42 TC	4.50	6.25	50.50	1½	6.00	34.00	8.00	4-12	5.50	0.25	1.75	16,444	35.73	F/FA40	F/FA35

* Assembly Weight FAIL CLOSE = Base# + (Per-IN# X STROKE) + FAIL CLOSE#

* Assembly Weight FAIL OPEN = Base# + (Per-IN# X STROKE) + FAIL OPEN#

AS Spring Canister Dimensions (in)							Weight (lbs)	
Canister Bore	CA	CB	CC	CD	CE	CF	FAIL CLOSE	FAIL OPEN
4	16.59	6.00	6.75	5.69	1/2-20	0.38	43	47
6	22.67	8.63	7.25	5.69	1/2-20	0.50	77	87
8	28.04	10.38	9.00	5.69	1/2-20	0.63	145	157
10	34.36	11.75	10.50	5.69	1/2-20	0.63	232	262
12A	43.69	15.75	13.50	9.50	3/4-10	0.88	490	605
12B	44.94	15.75	13.50	9.50	3/4-10	0.88	593	708
12C	43.14	15.75	13.50	9.50	3/4-10	0.88	609	724
12D	52.95	15.75	13.50	9.50	3/4-10	0.88	803	918
12E	62.68	15.75	13.50	9.50	3/4-10	0.88	1,020	1,135
16	56.17	19.75	17.50	13.50	3/4-10	0.88	1,194	1,244
22	80.89	25.75	23.50	19.50	3/4-10	0.88	3,480	3,540

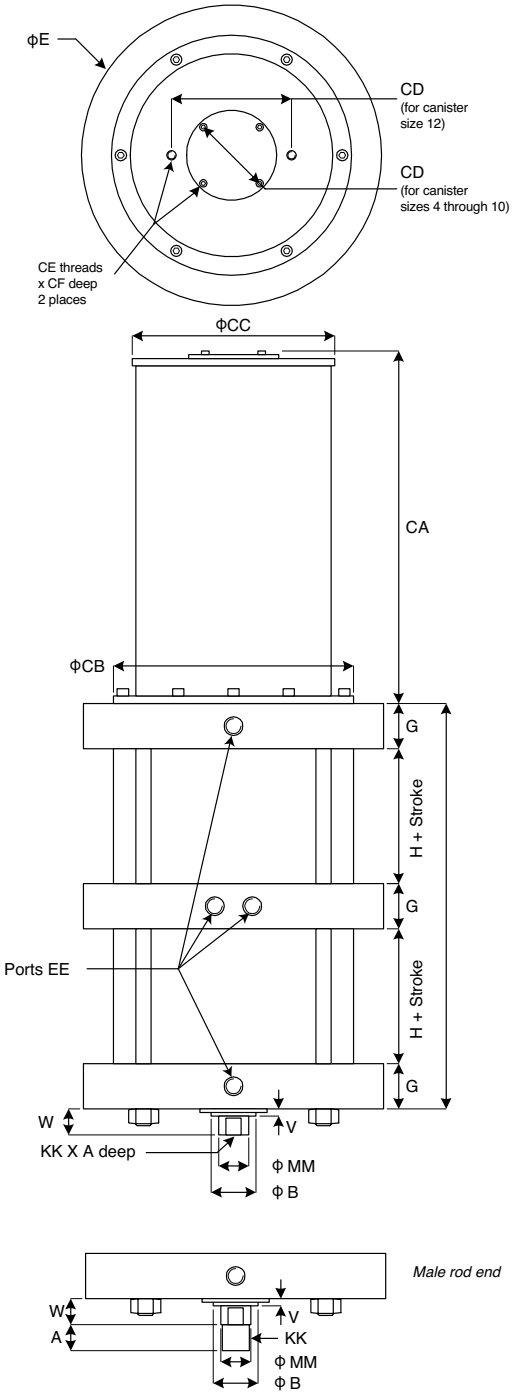

Bracket MT Pattern

MT Pattern, Small

Dimensions (in)				
Bore	D (thread)	E (depth)	N (places)	A (PCD)
6	½-20UNF	0.44	4	7.00
7	⅝-18UNF	0.56	4	8.13
8	⅝-18UNF	0.56	4	9.13
10	¾-16UNF	0.38	4	11.25
12	¾-16UNF	0.50	4	13.38
14 & 14TC	⅞-14UNF	0.50	4	15.50
16 & 16TC	⅞-14UNF	0.75	6	17.88
18 & 18TC	⅞-14UNF	0.75	6	20.00
20 & 20TC	⅞-14UNF	1.00	10	22.50

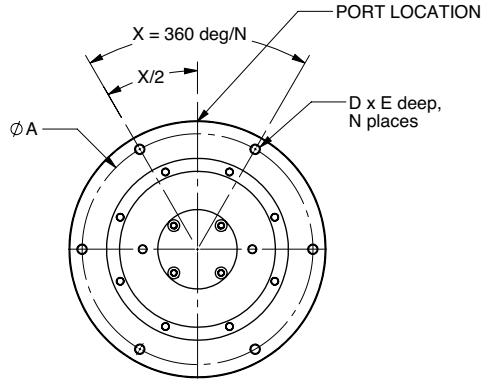

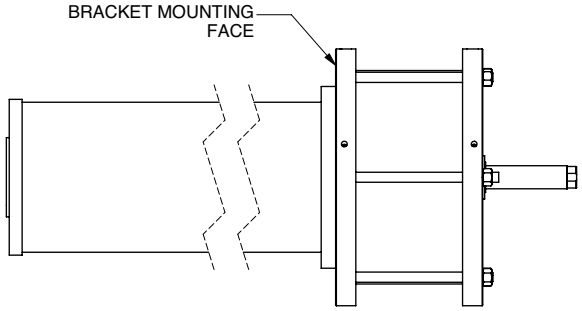

MT Pattern

Dimensions (in)					
Bore	A (PCD)	B (Angle)	C (Angle)	D (Thread Size)	E (Thread Depth)
22	24.50	36.00	36.00	½-20UNF	0.75
24	26.50	36.00	36.00	½-20UNF	0.75
26	28.75	30.00	30.00	½-20UNF	0.75
28	20.62	33.75	22.50	½-20UNF	0.75
30	32.63	33.75	22.50	½-20UNF	0.75

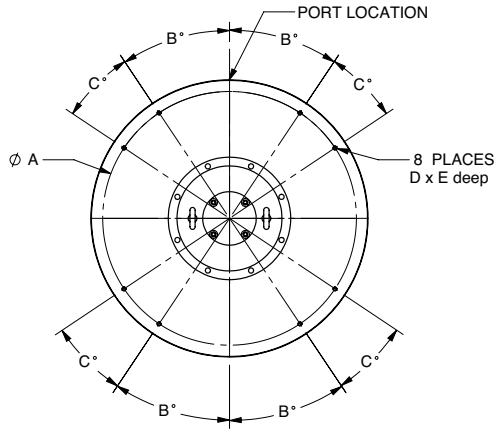

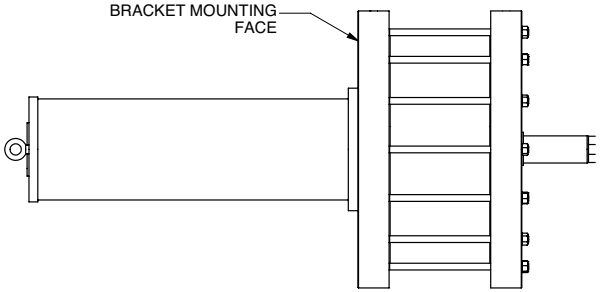

Accessories

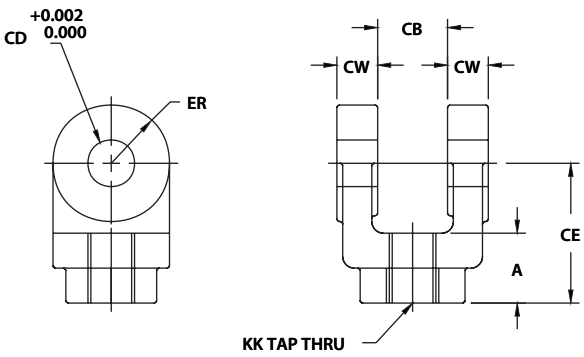

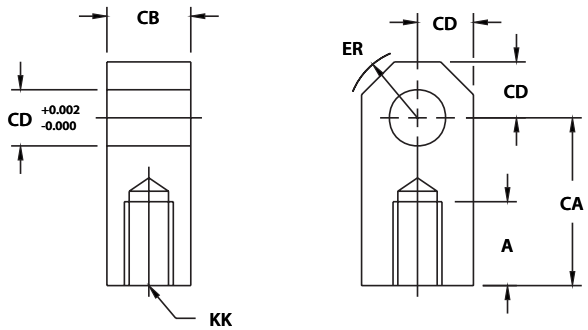

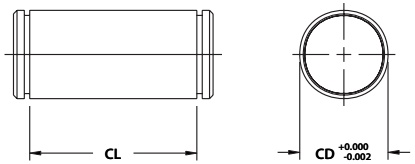

Rod Clevises						
PART #	KK	A	CB	CD	CA	ER
83-001	7/16-20	¾	¾	½	1-½	⅝
83-002	1/2-20	¾	¾	½	1-½	⅝
83-003	3/4-16	1-⅛	1-¼	¾	2-⅙	⅞
83-004	7/8-14	1-⅛	1-½	1	2-⅜	1-7/16
83-005	1-14	1-⅝	1-½	1	2-13/16	1-3/16
83-006	1-1/4-12	2	2	1-⅜	3-7/16	1-9/16
83-007	1-1/2-12	2-¼	2-½	1-¾	4	2
83-008	1-3/4-12	2-¼	2-½	2	4-⅜	2-⅞
83-009	1-7/8-12	3	2-½	2	5	2-½
83-010	2-1/4-12	3-½	3	2-½	5-13/16	2-13/16
83-011	2-1/2-12	3-½	3	3	6-⅛	3-¼
83-012	2-3/4-12	3-⅝	3-½	3	6-½	3-¼
83-013	3-1/2-12	4-½	4	3-½	7-⅝	3-⅞
83-014	4-1/2-12	5	4	3-½	7-⅝	3-⅞
83-015	4-12	5-½	4-½	4	9-⅛	4-7/16
83-016	4-1/4-12	5-¾	5	4	9-⅛	4-7/16

Rod Eyes							
PART #	KK	A	CB	CD	CE	CW	ER
82-001	7/16-20	¾	¾	½	11½	½	½
82-002	1/2-20	¾	¾	½	11½	½	½
82-003	3/4-16	1-⅛	1-¼	¾	2-⅜	⅝	¾
82-004	3/4-16	1-⅛	1-¼	¾	2-⅜	⅝	¾
82-005	7/8-14	1-⅝	1-½	1	2-15/16	¾	1
82-006	1-14	1-⅝	1-½	1	2-15/16	¾	1
82-007	1-14	1-⅝	1-½	1	3-⅛	¾	1
82-008	1-1/4-12	2	2	1-⅜	3-¾	1	1-⅜
82-009	1-1/4-12	2	2	1-⅜	4-⅛	1	1-⅜
82-010	1-1/2-12	2-¼	2-½	1-¾	4-½	1-¼	1-¾
82-011	1-3/4-12	3	2-½	2	5-½	1-¼	2
82-012	1-7/8-12	3	2-½	2	5-½	1-¼	2
82-013	2-1/2-12	3-½	3	2-½	6-½	1-½	2-½
82-014	3-1/4-12	3-½	3	3	6-¾	1-½	2-¾
82-015	2-3/4-12	3-½	3	3	6-¾	1-½	2-¾
82-016	3-1/4-12	3-½	4	3-½	7-¾	2	3-½
82-017	3-1/4-12	4-½	4	3-½	8-½	2	3-½
82-018	3-1/4-12	5-½	4-½	4	10	2-¼	4
82-019	4-12	5-½	4-½	4	10	2-¼	4

Pivot Pins		
PART #	CD	CL
81-001	½	1-⅞
81-002	¾	2-⅝
81-003	1	3-⅛
81-004	1-⅜	4-3/16
81-005	1-¾	5-3/16
81-006	2	5-3/16
81-007	2-½	6-3/16
81-008	3	6-¼
81-009	3-½	8-⅛
81-010	4	9-⅛

How to Order

SERIES

AS - Spring-Return Valve Actuator
ASC - Corrosion Resistant spring-return valve actuator

BORE SIZE

L - 6"	S - 14"	Y - 24"
M - 7"	T - 16"	B - 26"
N - 8"	W - 18"	F - 28"
P - 10"	X - 20"	I - 30"
R - 12"	A - 22"	

ROD DIAMETER

E- 1"	K - 2 1/2"
G - 1 3/8"	L - 3"
H - 1 3/4"	M - 3 1/2"
J - 2"	

ROD END

A4 - Series AS Female
N1 - Small Male Rod End
Z - Special, to be specified

SEALS

N - Standard Seals
F - High Temp (10C - 100C)
L - Low Temp (-54C - 90C)

PORTS & POSITIONS

NX - NPT
TX - BSPT
*** X denotes 2nd port position in relation to 1st port*

MOUNTINGS

I## - ISO Mounting Flange
M## - MSS Mounting Flange
PM - Pedestal Mount
X3 - Tie rods extended head end
X0 - No Mount

STROKE

XX.XX Stroke in inches

MODS

- Omit if none required
GT3 - Triple Seal Gland
P2 - Magnetic Piston (max 14" bore)
S5 - Hydraulic Use (max 150 psi)
W1 - "AWWA" Cylinder
A# - Thread extension ex: A2.50 = A = 2.50"
C1 - Epoxy Paint (Do not specify with ASC or AWWA)
M2 - Stainless Steel tie rods
M3 - Stainless Steel piston rod (Do not specify with ASC or AWWA)
M7 - Steel Barrel
LE - Lifting lugs (8" bore and above)
W# - Rod Extension ex: W2.50 = W = 2.50"
Modifications to be listed alpha numerically after the stroke # ex:ASNEA48NN11X012.0A2.50C1W5.50

TANDEM

TC - Tandem Cylinder
- Omit for single-stage

FAIL MODE

C: Fail-Close
O: Fail-Open

SPRING CANISTER SIZE

4	12A	12E
6	12B	16
8	12C	22
10	12D	

SPRING PRELOAD

XXXXX - Spring preload in lbs
See catalogue for values

EXAMPLE

AS A L A4 N N1 PM 8.75 TC C 12E - 12931

- AS series
- 22" bore
- 3" rod
- Female rod end
- Standard seals
- NPT ports, 2nd port position 1
- Pedestal mounting
- 8.75" stroke
- Tandem cylinder
- Fail-close
- 12E spring canister
- 12,931 lbs spring preload

EXAMPLE WITH AUTOMATION OPTIONS

Z AS A L A4 PM TC C 12E -00#####

- Automated cylinder
- AS series
- 22" bore
- 3" rod
- Female rod end
- Pedestal mount
- Tandem cylinder
- Fail-close
- 12E spring canister
- Unique number assigned by online part configurator

Related materials

Visit our website to download or request a printed catalogue.

Solutions Include:

Valve Actuators

Fail-Safe Systems

Digital Process Control Panels

Pneumatic Process Control Panels

For sales and technical information, Contact us at:

Head Office/Factory:
6194 Notre Dame West
Montreal, Quebec H4C 1V4
TOLL-FREE: 855-341-3415

LATAM Sales Office:
T: +1-514-553-2328
info@cowandynamics.com

/cowandynamics
/company/cowan-dynamics
/cowandynamics
/+cowandynamics

www.cowandynamics.com

Published December 10, 2021