cowan dynamics

Actuation Solutions and Systems for the
World's Most Challenging Environments

P SERIES

250 psi

NFPA Pneumatic Cylinder

Bore Sizes from 11/2" to 14"

TECHNICAL BROCHURE

Design & Materials

Temperature Ratings	
Low Temp.	-54 C to 60 C
Standard Temp.	-40 C to 105 C
High Temp.	-29 C to 205 C

High Load Piston Seal Standard
Excellent wear resistance and sealing

Cushion Screw
(Optional) Fully adjustable

Piston Rod Flats
2 wrench flats for easy installation

Cushion Plunger Floating cushion plunger provides maximum cushioning effect combined with a quick start for optimum performance

High Strength Nylon Wear Rings
BZ-PTFE for high temp version

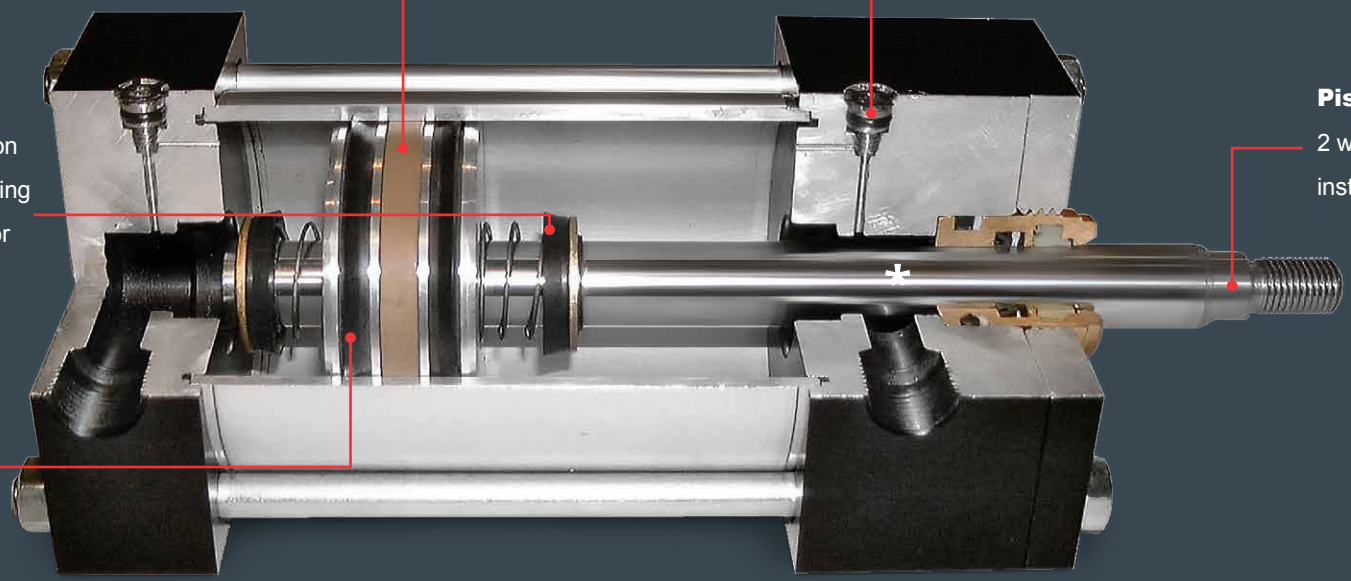

Gland Seal Configuration

Triple Seal Gland Standard

Gland Bushing: Cartridge type, no special tools required for removal

Buffer Seal: Protects primary seal from pressure spikes. PTFE for low friction and long service life.

Primary Seal: Heavy Duty Polyurethane "U"-cup for excellent seal ability and long service life.

Encased Rod Wiper: Rugged wiper deflects contamination away for the rod seals for long service.

Material Breakdown	STANDARD
Head & cap	Machined Steel
Barrel	Honed Seamless Steel Tubing *Optional Chrome Plating available
Piston	Ductile Iron
Piston rod	1045
Gland	SAE 660 Bronze
Tie Rod	Stress-proof Steel

Rod Thread Sizes

1½”- 6” Bore

INTERMEDIATE MALE

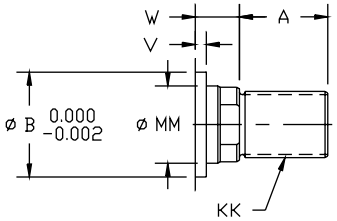

SMALL FEMALE

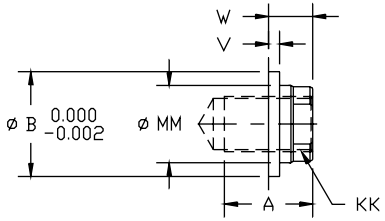

SMALL MALE

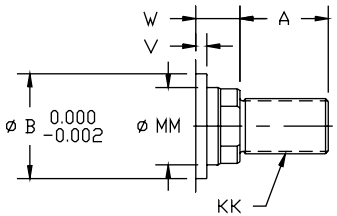

FULL MALE

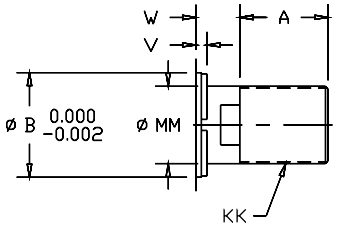

Actuator Dimenstions (in)							
Bore	Rod Φ MM	Thread (KK)		A	B	V	W
		SM-SF	IM				
1 1/2	0.63	7/16-20	½-20	0.75	1.13	0.25	0.63
	1.00	¾-16	⅞-14	1.13	1.50	0.50	1.00
2	0.63	7/16-20	½-20	0.75	1.13	0.25	0.63
	1.00	¾-16	⅞-14	1.13	1.50	0.50	1.00
	1.38	1-14	1¼-12	1.63	2.00	0.63	1.25
2 1/2	0.63	7/16-20	½-20	0.75	1.13	0.25	0.63
	1.00	¾-16	⅞-14	1.13	1.50	0.50	1.00
	1.38	1-14	1¼-12	1.63	2.00	0.63	1.25
3 1/4	1.00	¾-16	⅞-14	1.13	1.50	0.25	0.75
	1.38	1-14	1¼-12	1.63	2.00	0.38	1.00
4	1.00	¾-16	⅞-14	1.13	1.50	0.25	0.75
	1.38	1-14	1¼-12	1.63	2.00	0.38	1.00
5	1.00	¾-16	⅞-14	1.13	1.50	0.25	0.75
	1.38	1-14	1¼-12	1.63	2.00	0.38	1.00
	1.75	1¼-12	1½-12	2.00	2.38	0.50	1.25
6	1.38	1-14	1¼-12	1.63	2.00	0.25	0.88
	1.75	1¼-12	1½-12	2.00	2.38	0.38	1.13
	2.00	1½-12	1¾-12	2.25	2.63	0.38	1.25

MF1

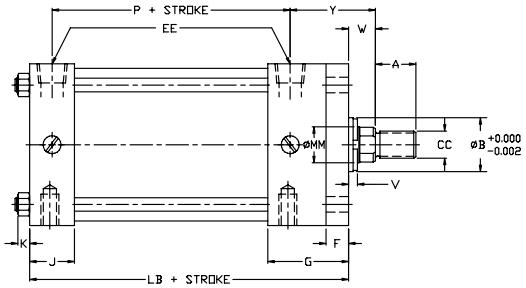

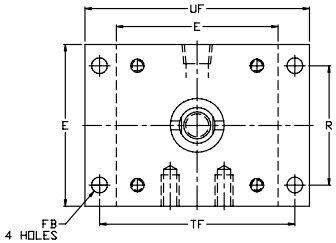

MF2

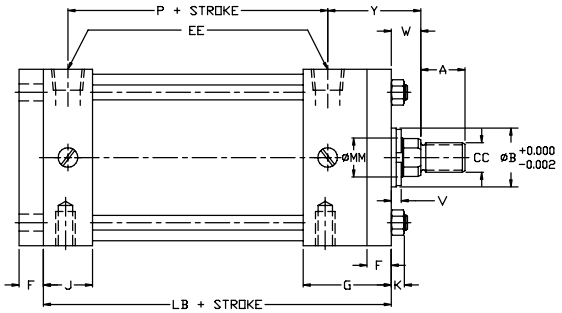

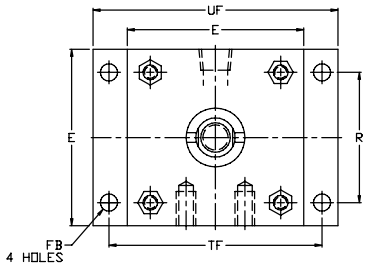

MF5

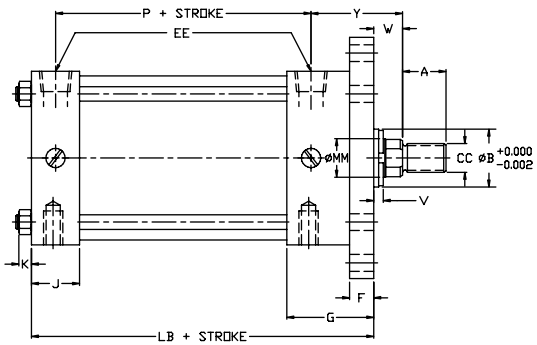

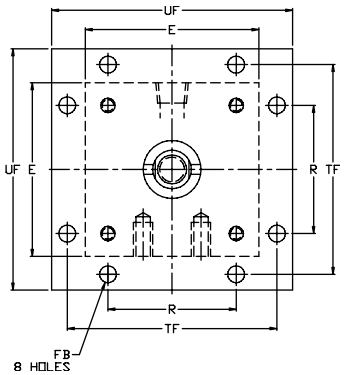

MF6

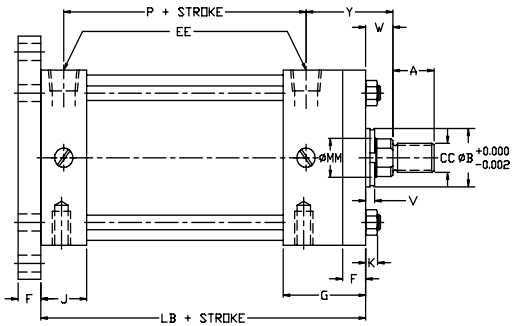

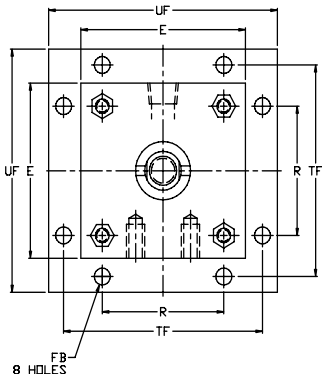

Dimensions (in)						
BORE	E	EE (NPT)	F	FB	G	J
1½	2.00	0.38	0.38	0.31	2.00	1.00
2	2.50	0.38	0.38	0.38	2.00	1.00
2½	3.00	0.38	0.38	0.38	2.00	1.13
3¼	3.75	0.50	0.63	0.44	2.25	1.25
4	4.50	0.50	0.63	0.44	2.25	1.25
5	5.50	0.50	0.63	0.56	2.25	1.50
6	6.50	0.75	0.75	0.56	2.75	1.63

Dimensions (in)						
BORE	K	TF	UF	LB	P	R
1½	0.25	2.75	3.38	4.00	2.25	1.43
2	0.31	3.38	4.13	4.00	2.25	1.84
2½	0.31	3.88	4.63	4.13	2.38	2.19
3¼	0.38	4.69	5.50	4.88	2.63	2.76
4	0.38	5.44	6.25	4.88	2.63	3.32
5	0.44	6.63	7.63	5.13	2.88	4.10
6	0.44	7.63	8.63	5.75	3.13	4.88

Rod Thread Table

Dimenstions (in)			
Bore	Rod Φ MM	Y	For other values please see chart on pg 3
1½	0.63	1.94	
	1.00	2.31	
2	0.63	1.94	
	1.00	2.31	
	1.38	2.56	
2½	0.63	1.94	
	1.00	2.31	
	1.38	2.56	
3¼	1.00	2.38	
	1.38	2.63	
4	1.00	2.38	
	1.38	2.63	
5	1.00	2.31	
	1.38	2.56	
	1.75	2.81	
6	1.38	2.81	
	1.75	3.06	
	2.00	3.19	

MP1

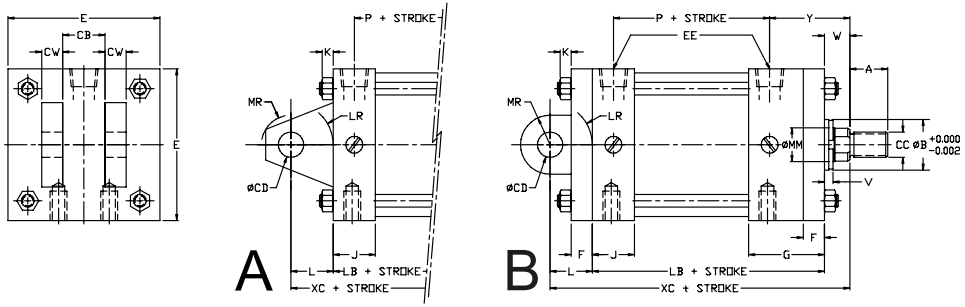

MP2

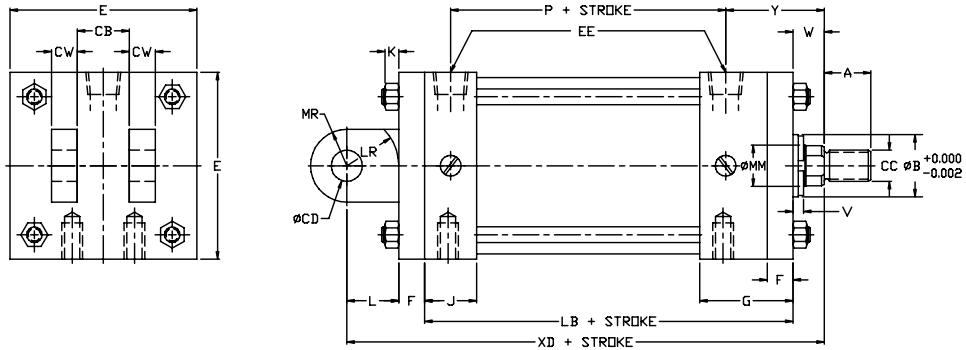

MP3

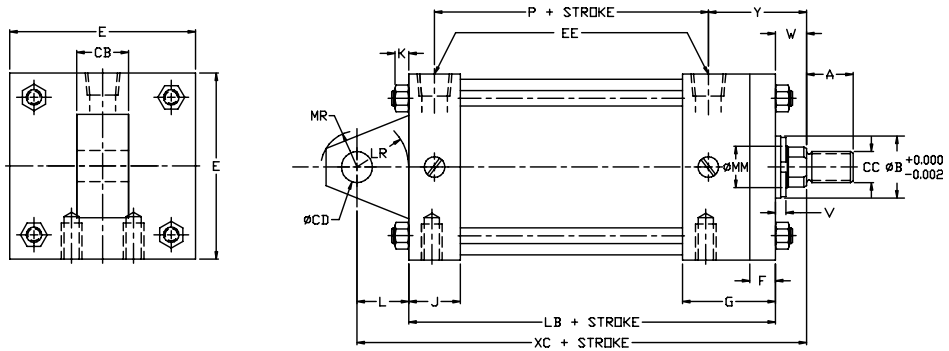

MP4

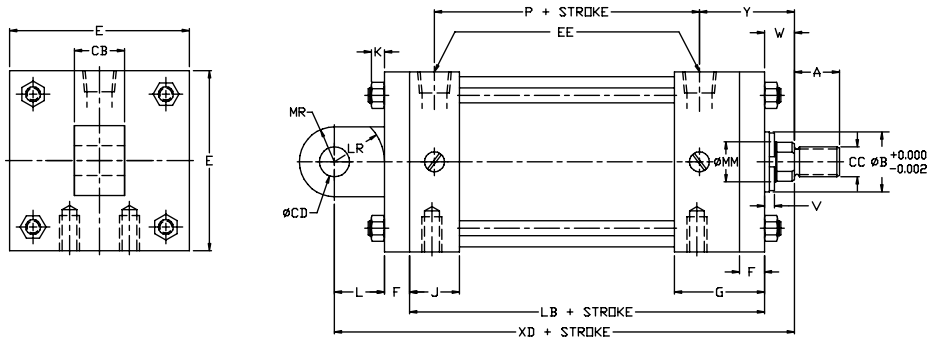

Dimensions (in)							
BORE	CB	CD	CW	E	EE (NPT)	F	G
1½	0.75	0.50	0.50	2.00	0.38	0.38	2.00
2	0.75	0.50	0.50	2.50	0.38	0.38	2.00
2½	0.75	0.50	0.50	3.00	0.38	0.38	2.00
3¼	1.25	0.75	0.64	3.75	0.50	0.63	2.25
4	1.25	0.75	0.64	4.50	0.50	0.63	2.25
5	1.25	0.75	0.64	5.50	0.50	0.63	2.25
6	1.50	1.00	0.75	6.50	0.75	0.75	2.75

Dimensions (in)							
BORE	J	K	L	LB	LR	MR	P
1½	1.00	0.25	0.75	4.00	0.75	0.63	2.25
2	1.00	0.31	0.75	4.00	0.75	0.63	2.25
2½	1.13	0.31	0.75	4.13	0.75	0.63	2.38
3¼	1.25	0.38	1.25	4.88	1.25	0.88	2.63
4	1.25	0.38	1.25	4.88	1.25	0.88	2.63
5	1.50	0.44	1.25	5.13	1.25	0.88	2.88
6	1.63	0.44	1.50	5.75	1.50	1.25	3.13

Rod Thread Table

Dimenstions (in)				
Bore	Rod Φ MM	XC	XD	Y
1½	0.63	5.38	5.75	1.94
	1.00	5.75	6.13	2.31
2	0.63	5.38	5.75	1.94
	1.00	5.75	6.13	2.31
	1.38	6.00	6.38	2.56
2½	0.63	5.50	5.88	1.94
	1.00	5.88	6.25	2.31
	1.38	6.13	6.50	2.56
3¼	1.00	6.88	7.50	2.38
	1.38	7.13	7.75	2.63
4	1.00	6.88	7.50	2.38
	1.38	7.13	7.75	2.63
5	1.00	7.13	7.75	2.31
	1.38	7.38	8.00	2.56
	1.75	7.63	8.25	2.81
6	1.38	8.13	8.88	2.81
	1.75	8.38	9.13	3.06
	2.00	8.50	9.25	3.19

For other values please see chart on pg 3

MS1

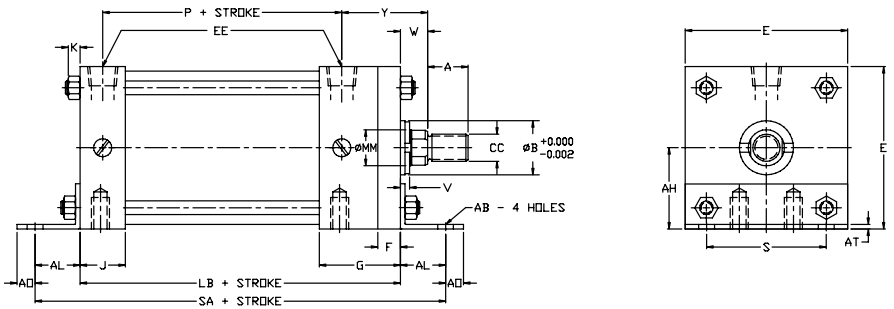

MS2

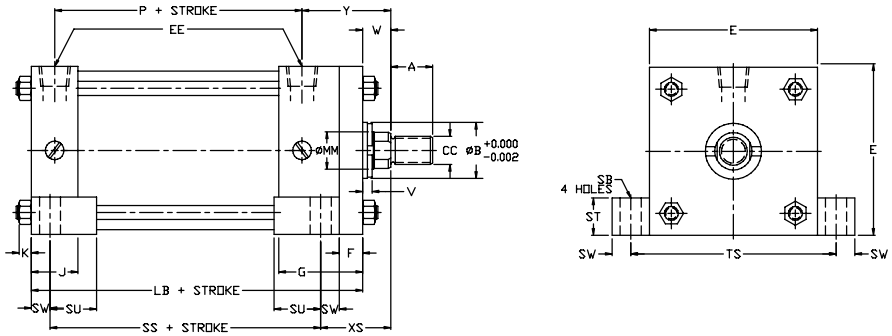

MS3

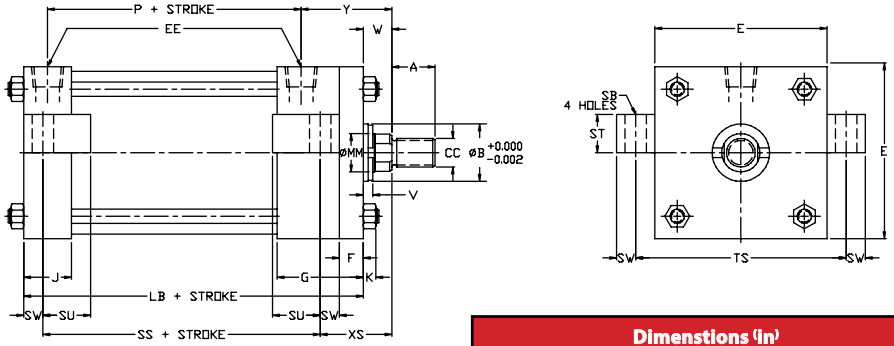

MS1

Dimensions (in)														
BORE	AB	AH	AL	AO	AT	E	EE (NPT)	F	G	J	K	LB	P	S
1½	0.44	1.19	1.00	0.38	0.13	2.00	0.38	0.38	2.00	1.00	0.25	4.00	2.25	1.25
2	0.44	1.44	1.00	0.38	0.13	2.50	0.38	0.38	2.00	1.00	0.31	4.00	2.25	1.75
2½	0.44	1.63	1.00	0.38	0.13	3.00	0.38	0.38	2.00	1.13	0.31	4.13	2.38	1.25
3¼	0.56	1.94	1.25	0.50	0.13	3.75	0.50	0.63	2.25	1.25	0.38	4.88	2.63	2.75
4	0.56	2.25	1.25	0.50	0.13	4.50	0.50	0.63	2.25	1.25	0.38	4.88	2.63	3.50
5	0.69	2.75	1.38	0.63	0.19	5.50	0.50	0.63	2.25	1.50	0.44	5.13	2.88	4.25
6	0.81	3.25	1.38	0.63	0.19	6.50	0.75	0.75	2.75	1.63	0.44	5.75	3.13	5.25

MS2, MS3

Dimensions (in)													
BORE	E	EE (NPT)	F	G	J	K	LB	P	SB	ST	SU	SW	TS
1½	2.00	0.38	0.38	2.00	1.00	0.25	4.00	2.25	0.44	0.50	0.94	0.38	2.75
2	2.50	0.38	0.38	2.00	1.00	0.31	4.00	2.25	0.44	0.50	0.94	0.38	3.25
2½	3.00	0.38	0.38	2.00	1.13	0.31	4.13	2.38	0.44	0.50	0.94	0.38	3.75
3¼	3.75	0.50	0.63	2.25	1.25	0.38	4.88	2.63	0.56	0.75	1.25	0.50	4.75
4	4.50	0.50	0.63	2.25	1.25	0.38	4.88	2.63	0.56	0.75	1.25	0.50	5.50
5	5.50	0.50	0.63	2.25	1.50	0.44	5.13	2.88	0.81	1.00	1.56	0.69	6.88
6	6.50	0.75	0.75	2.75	1.63	0.44	5.75	3.13	0.81	1.00	1.56	0.69	7.88

Rod Thread Table

Dimenstions (in)						
Bore	Rod Φ MM	SA	SS	XS	Y	
1½	0.63	6.00	2.88	1.38	1.94	For other values please see chart on pg 3
	1.00	6.00	2.88	1.75	2.31	
2	0.63	6.00	2.88	1.38	1.94	
	1.00	6.00	2.88	1.75	2.31	
	1.38	6.00	2.88	2.00	2.56	
2½	0.63	6.13	3.00	1.38	1.94	
	1.00	6.13	3.00	1.75	2.31	
	1.38	6.13	3.00	2.00	2.56	
3¼	1.00	7.38	3.25	1.88	2.38	
	1.38	7.38	3.25	2.13	2.63	
4	1.00	7.38	3.25	1.88	2.38	
	1.38	7.38	3.25	2.13	2.63	
5	1.00	7.88	3.13	2.06	2.31	
	1.38	7.88	3.13	2.31	2.56	
	1.75	7.88	3.13	2.56	2.81	
6	1.38	8.50	3.63	2.31	2.81	
	1.75	8.50	3.63	2.56	3.06	
	2.00	8.50	3.63	2.69	3.19	

MS4

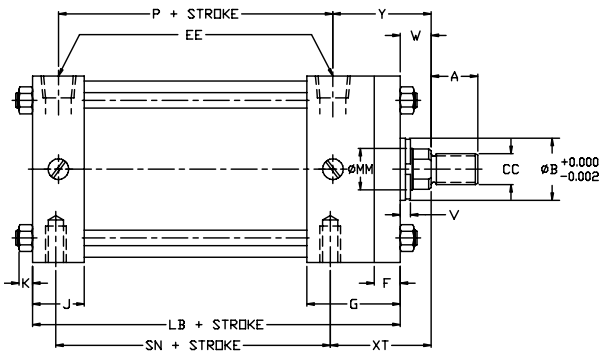

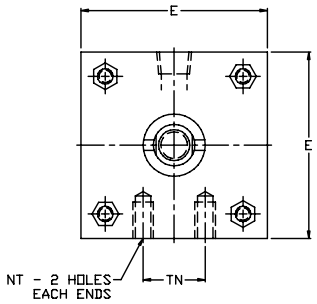

MS7

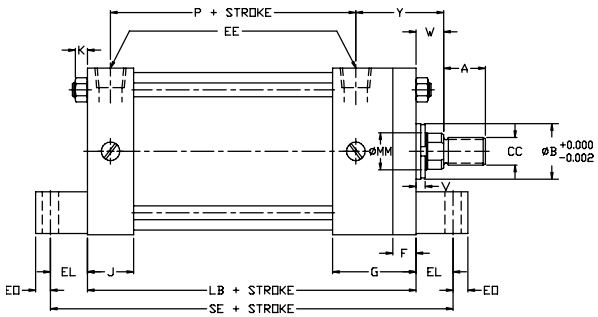

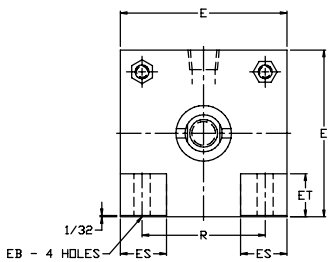

MS4

Dimensions (in)												
BORE	E	EE (NPT)	F	G	H	J	K	LB	P	NT	TN	SN
1½	2.00	0.38	0.38	2.00	1.00	1.00	0.25	4.00	2.25	¼-20	0.63	2.25
2	2.50	0.38	0.38	2.00	1.00	1.00	0.31	4.00	2.25	5⁄16-18	0.88	2.25
2½	3.00	0.38	0.38	2.00	1.00	1.13	0.31	4.13	2.38	⅜-16	1.25	2.38
3¼	3.75	0.50	0.63	2.25	1.38	1.25	0.38	4.88	2.63	½-13	1.50	2.63
4	4.50	0.50	0.63	2.25	1.38	1.25	0.38	4.88	2.63	½-13	2.06	2.63
5	5.50	0.50	0.63	2.25	1.38	1.50	0.44	5.13	2.88	⅝-11	2.69	2.88
6	6.50	0.75	0.75	2.75	1.38	1.63	0.44	5.75	3.13	¾-10	3.25	3.13

MS7

Dimensions (in)														
BORE	E	EB	EE (NPT)	EL	EO	ES	ET	F	G	J	K	LB	P	R
1½	2.00	0.31	0.38	0.75	0.25	0.56	0.53	0.38	2.00	1.00	0.25	4.00	2.25	1.43
2	2.50	0.38	0.38	0.94	0.31	0.63	0.63	0.38	2.00	1.00	0.31	4.00	2.25	1.84
2½	3.00	0.38	0.38	1.06	0.31	0.81	0.78	0.38	2.00	1.13	0.31	4.13	2.38	2.19
3¼	3.75	0.44	0.50	0.88	0.38	1.00	0.94	0.63	2.25	1.25	0.38	4.88	2.63	2.76
4	4.50	0.44	0.50	1.00	0.38	1.25	1.16	0.63	2.25	1.25	0.38	4.88	2.63	3.32
5	5.50	0.56	0.50	1.06	0.50	1.38	1.38	0.63	2.25	1.50	0.44	5.13	2.88	4.10
6	6.50	0.56	0.75	1.00	0.50	1.75	0.59	0.75	2.75	1.63	0.44	5.75	3.13	4.88

Rod Thread Table

Dimenstions (in)					
Bore	Rod Φ MM	XT	SE	Y	
1½	0.63	1.94	5.50	1.94	For other values please see chart on pg 3
	1.00	2.31	5.50	2.31	
2	0.63	1.94	5.88	1.94	
	1.00	2.31	5.88	2.31	
	1.38	2.56	5.88	2.56	
2½	0.63	1.94	6.25	1.94	
	1.00	2.31	6.25	2.31	
	1.38	2.56	6.25	2.56	
3¼	1.00	2.44	6.63	2.38	
	1.38	2.69	6.63	2.63	
4	1.00	2.44	6.88	2.38	
	1.38	2.69	6.88	2.63	
5	1.00	2.44	7.25	2.31	
	1.38	2.69	7.25	2.56	
	1.75	2.94	7.25	2.81	
6	1.38	2.81	7.75	2.81	
	1.75	3.06	7.75	3.06	
	2.00	3.19	7.75	3.19	

MT1

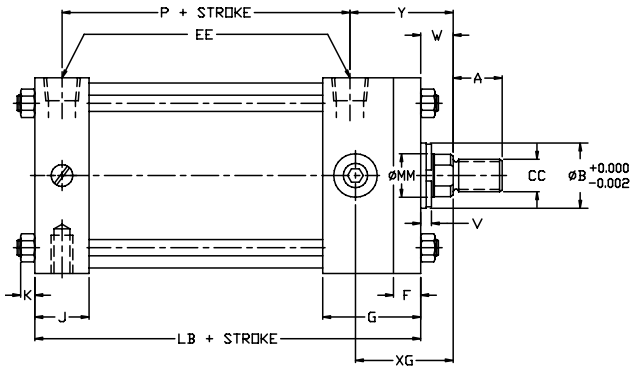

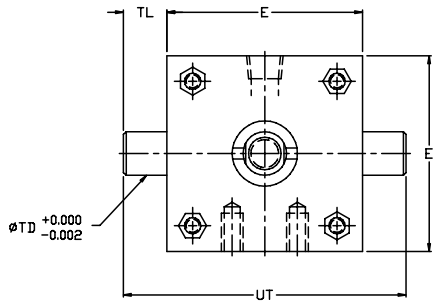

MT2

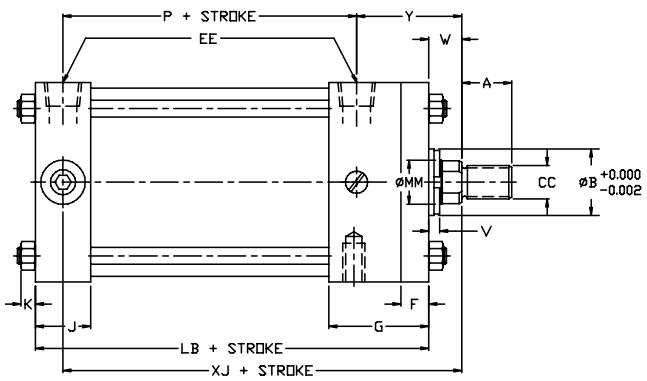

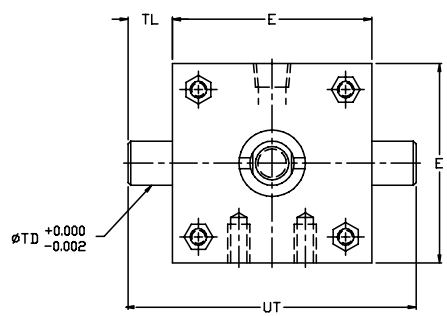

Dimensions (in)											
BORE	E	EE (NPT)	F	G	J	K	LB	P	TD	TL	UT
1½	2.00	0.38	0.38	2.00	1.00	0.25	4.00	2.25	1.00	1.00	4.00
2	2.50	0.38	0.38	2.00	1.00	0.31	4.00	2.25	1.00	1.00	4.50
2½	3.00	0.38	0.38	2.00	1.13	0.31	4.13	2.38	1.00	1.00	5.00
3¼	3.75	0.50	0.63	2.25	1.25	0.38	4.88	2.63	1.00	1.00	5.75
4	4.50	0.50	0.63	2.25	1.25	0.38	4.88	2.63	1.00	1.00	6.50
5	5.50	0.50	0.63	2.25	1.50	0.44	5.13	2.88	1.00	1.00	7.50
6	6.50	0.75	0.75	2.75	1.63	0.44	5.75	3.13	1.38	1.38	9.25

Rod Thread Table

Dimenstions (in)					
Bore	Rod Φ MM	XG	XJ	Y	
1½	0.63	1.75	4.13	1.94	For other values please see chart on pg 3
	1.00	2.13	4.50	2.31	
2	0.63	1.75	4.13	1.94	
	1.00	2.13	4.50	2.31	
	1.38	2.38	4.75	2.56	
2½	0.63	1.75	4.25	1.94	
	1.00	2.13	4.63	2.31	
	1.38	2.38	4.88	2.56	
3¼	1.00	2.25	5.00	2.38	
	1.38	2.50	5.25	2.63	
4	1.00	2.25	5.00	2.38	
	1.38	2.50	5.25	2.63	
5	1.00	2.25	5.25	2.31	
	1.38	2.50	5.50	2.56	
	1.75	2.75	5.75	2.81	
6	1.38	2.63	5.88	2.81	
	1.75	2.88	6.13	3.06	
	2.00	3.00	6.25	3.19	

MT4

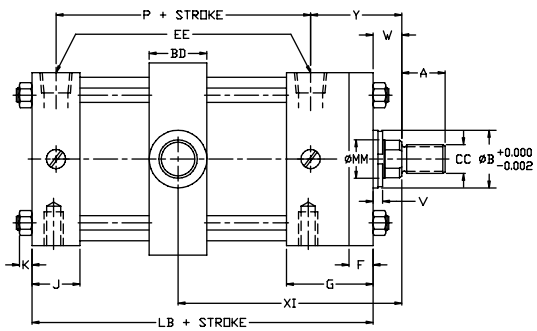

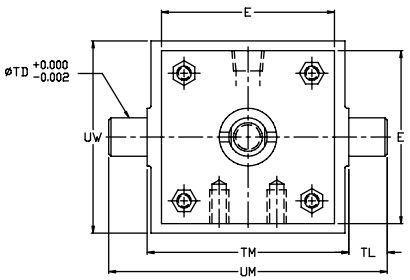

MX1, MX2, MX3

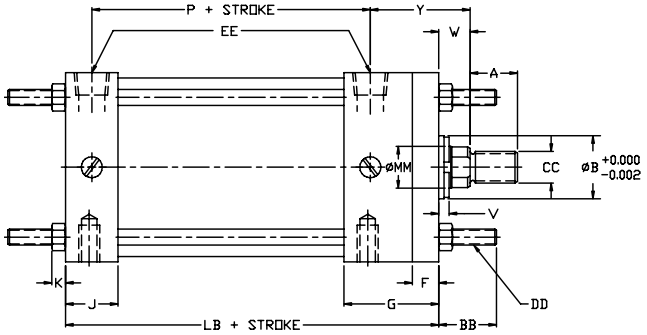

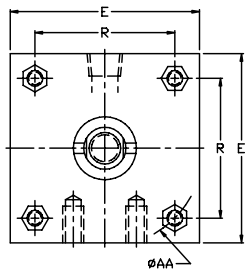

MT4

Dimensions (in)														
BORE	BD	E	EE (NPT)	F	G	J	K	LB	P	TD	TL	TM	UM	UW
1½	1.25	2.00	0.38	0.38	2.00	1.00	0.25	4.00	2.25	1.00	1.00	2.50	4.50	2.50
2	1.25	2.50	0.38	0.38	2.00	1.00	0.31	4.00	2.25	1.00	1.00	3.00	5.00	3.00
2½	1.25	3.00	0.38	0.38	2.00	1.13	0.31	4.13	2.38	1.00	1.00	3.50	5.50	3.50
3¼	1.50	3.75	0.50	0.63	2.25	1.25	0.38	4.88	2.63	1.00	1.00	4.50	6.50	4.50
4	1.50	4.50	0.50	0.63	2.25	1.25	0.38	4.88	2.63	1.00	1.00	5.25	7.25	5.25
5	1.50	5.50	0.50	0.63	2.25	1.50	0.44	5.13	2.88	1.00	1.00	6.25	8.25	6.25
6	1.75	6.50	0.75	0.75	2.75	1.63	0.44	5.75	3.13	1.38	1.38	7.63	10.38	7.63

MX1, MX2, MX3

Dimensions (in)												
BORE	AA	BB	DD	E	EE (NPT)	F	G	J	K	LB	P	R
1½	2.02	1.00	¼-28	2.00	0.38	0.38	2.00	1.00	0.25	4.00	2.25	1.43
2	2.60	1.13	5/16-24	2.50	0.38	0.38	2.00	1.00	0.31	4.00	2.25	1.84
2½	3.10	1.13	5/16-24	3.00	0.38	0.38	2.00	1.13	0.31	4.13	2.38	2.19
3¼	3.90	1.13	⅜-24	3.75	0.50	0.63	2.25	1.25	0.38	4.88	2.63	2.76
4	4.70	1.38	⅜-24	4.50	0.50	0.63	2.25	1.25	0.38	4.88	2.63	3.32
5	5.80	1.81	½-20	5.50	0.50	0.63	2.25	1.50	0.44	5.13	2.88	4.10
6	6.90	1.81	½-20	6.50	0.75	0.75	2.75	1.63	0.44	5.75	3.13	4.88

Rod Thread Table

Dimenstions (in)				
Bore	Rod Φ MM	Min XI	Y	
1½	0.63	3.31	1.94	For other values please see chart on pg 3
	1.00	3.69	2.31	
2	0.63	3.44	1.94	
	1.00	3.81	2.31	
	1.38	4.16	2.56	
2½	0.63	3.44	1.94	
	1.00	3.81	2.31	
	1.38	4.16	2.56	
3¼	1.00	4.19	2.38	
	1.38	4.44	2.63	
4	1.00	4.19	2.38	
	1.38	4.44	2.63	
5	1.00	4.31	2.31	
	1.38	4.44	2.56	
	1.75	4.69	2.81	
6	1.38	4.94	2.81	
	1.75	5.19	3.06	
	2.00	5.31	3.19	

MP5

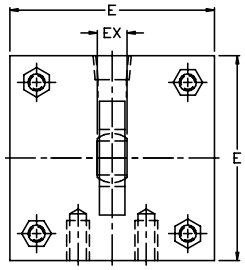

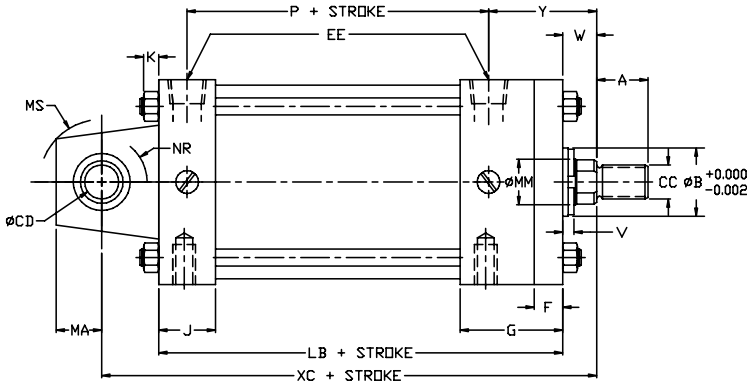

Dimensions (in)													
BORE	CD	E	EE (NPT)	EX	F	G	J	K	MA	MS	NR	LB	P
1½	0.50	2.00	0.38	0.44	0.38	2.00	1.00	0.25	0.75	0.94	0.63	4.00	2.25
2	0.50	2.50	0.38	0.44	0.38	2.00	1.00	0.31	0.75	0.94	0.63	4.00	2.25
2½	0.50	3.00	0.38	0.44	0.38	2.00	1.13	0.31	0.75	0.94	0.63	4.13	2.38
3¼	0.75	3.75	0.50	0.66	0.63	2.25	1.25	0.38	1.00	1.38	1.00	4.88	2.63
4	0.75	4.50	0.50	0.66	0.63	2.25	1.25	0.38	1.00	1.38	1.00	4.88	2.63
5	0.75	5.50	0.50	0.66	0.63	2.25	1.50	0.44	1.00	1.38	1.00	5.13	2.88
6	1.00	6.50	0.75	0.88	0.75	2.75	1.63	0.44	1.25	1.69	1.25	5.75	3.13

Rod Thread Table

Dimenstions (in)				
Bore	Rod Φ MM	XC	Y	
1½	0.63	5.38	1.94	For other values please see chart on pg 3
	1.00	5.75	2.31	
2	0.63	5.38	1.94	
	1.00	5.75	2.31	
	1.38	6.00	2.56	
2½	0.63	5.50	1.94	
	1.00	5.88	2.31	
	1.38	6.13	2.56	
3¼	1.00	6.88	2.38	
	1.38	7.13	2.63	
4	1.00	6.88	2.38	
	1.38	7.13	2.63	
5	1.00	7.13	2.31	
	1.38	7.38	2.56	
	1.75	7.63	2.81	
6	1.38	8.13	2.81	
	1.75	8.38	3.06	
	2.00	8.50	3.19	

Double Rod Ended

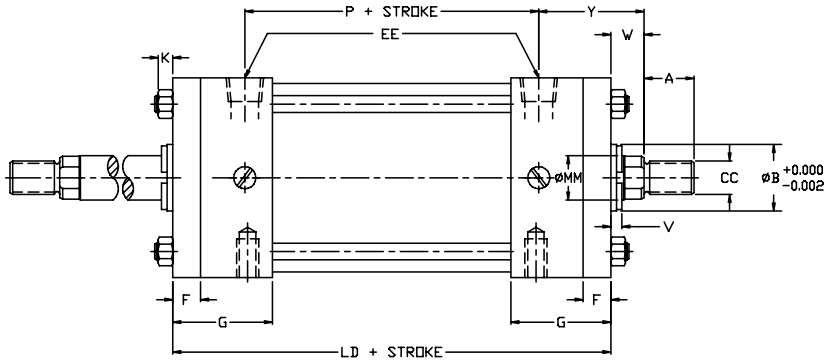

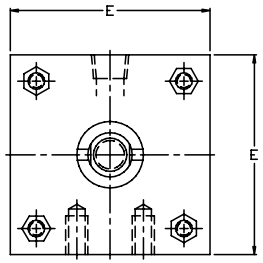

Actuator Dimensions (in)								
BORE	E	EE (NPT)	F	G	J	K	LD	P
1½	2.00	0.38	0.38	2.00	1.00	0.25	5.00	2.38
2	2.50	0.38	0.38	2.00	1.00	0.31	5.00	2.38
2½	3.00	0.38	0.38	2.00	1.13	0.31	5.00	2.38
3¼	3.75	0.50	0.63	2.25	1.25	0.38	5.88	2.63
4	4.50	0.50	0.63	2.25	1.25	0.38	5.88	2.63
5	5.50	0.50	0.63	2.25	1.50	0.44	5.88	2.75
6	6.50	0.75	0.75	2.75	1.63	0.44	6.88	3.00

Rod Thread Size

8”-14” Bore

INTERMEDIATE MALE

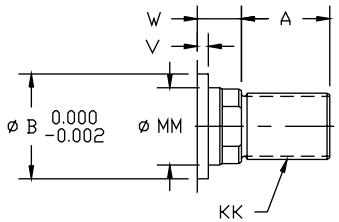

SMALL FEMALE

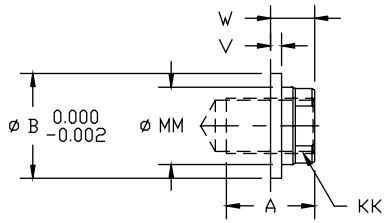

SMALL MALE

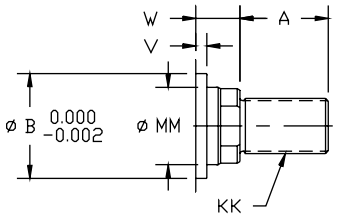

FULL MALE

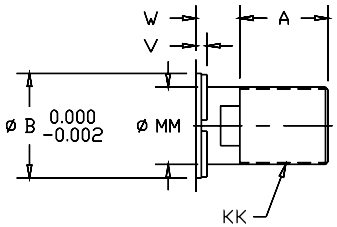

Actuator Dimenstions (in)							
Bore	Rod Φ MM	Thread (KK)		A	B	V	W
		SM·SF	IM				
8	1.38	1¼-12	1-14	1.63	2.00	0.25	0.88
	1.75	1½-12	1¼-12	2.00	2.34	0.38	1.13
	2.00	1¾-12	1½-12	2.25	2.63	0.38	1.25
	2.50	2¼-12	1⅞-12	3.00	3.13	0.50	1.50
10	1.75	1½-12	1¼-12	2.00	2.38	0.38	1.13
	2.00	1¾-12	1½-12	2.25	2.63	0.38	1.25
	2.50	2¼-12	1⅞-12	3.00	3.13	0.50	1.50
12	2.00	1¾-12	1½-12	2.25	2.63	0.38	1.25
	2.50	2¼-12	1⅞-12	3.00	3.13	0.50	1.50
	3.00	2¾-12	2¼-12	3.50	3.75	0.50	1.50
14	2.50	2¼-12	1⅞-12	3.00	3.13	0.50	1.50
	3.00	2¾-12	2¼-12	3.50	3.75	0.50	1.50
	3.50	3¼-12	2½-12	3.50	4.25	0.50	1.50

ME3

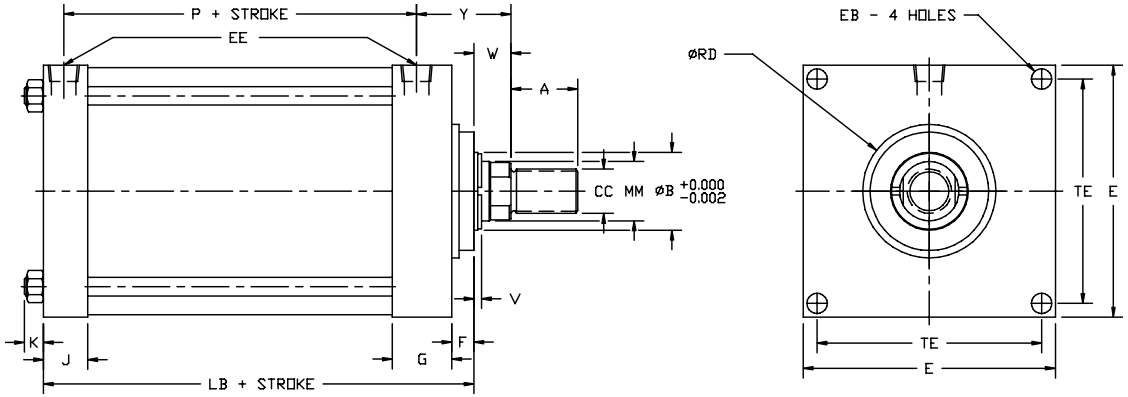

ME4

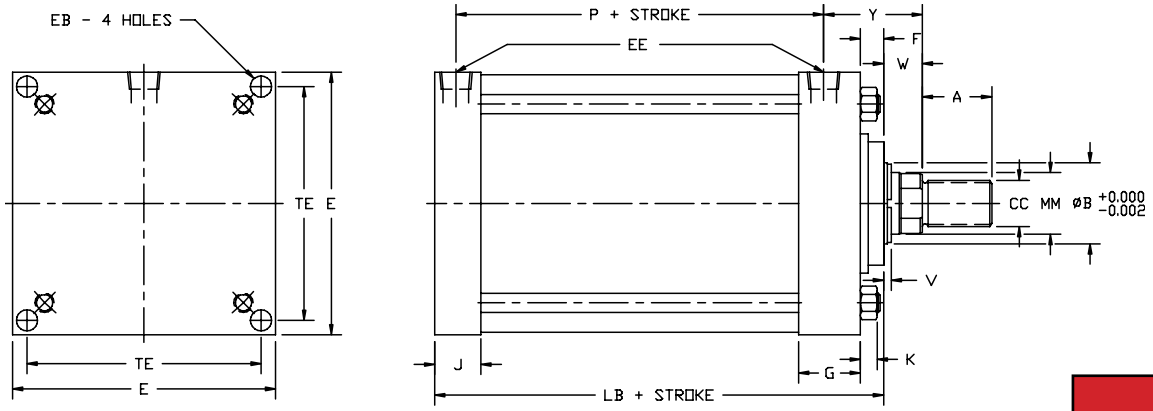

Rod Thread Table

Dimenstions (in)			
Bore	Rod Φ MM	Y	
8	1.38	2.81	For other values please see chart on pg 11
	1.75	3.06	
	2.00	3.19	
	2.50	3.44	
10	1.75	3.13	
	2.00	3.25	
	2.50	3.50	
12	2.00	3.25	
	2.50	3.50	
	3.00	3.50	
14	2.50	3.81	
	3.00	3.81	
	3.50	3.81	

Actuator Dimensions (in)											
BORE	E	EE (NPT)	EB	F	G	J	K	RD	TE	LB	P
8	8.50	0.75	0.69	0.75	2.00	1.50	0.56	4.00	7.57	5.88	3.25
10	10.63	1.00	0.81	0.75	2.25	2.00	0.69	4.50	9.40	7.13	4.13
12	12.75	1.00	0.81	0.75	2.25	2.00	0.69	5.50	11.10	7.63	4.63
14	14.75	1.25	0.94	0.75	2.75	2.25	0.75	6.00	12.87	8.88	5.50

MP1

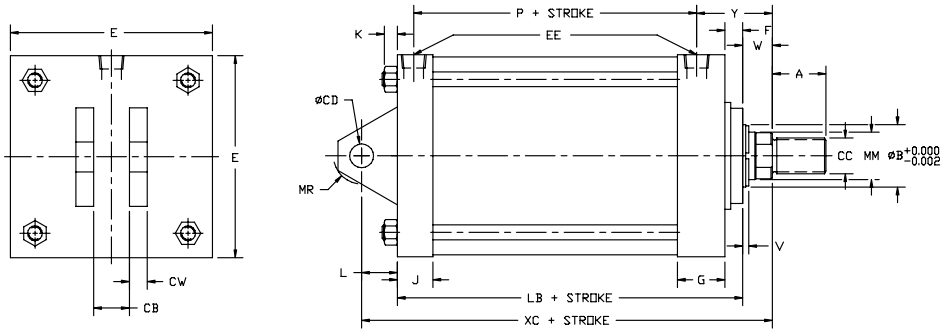

MP2

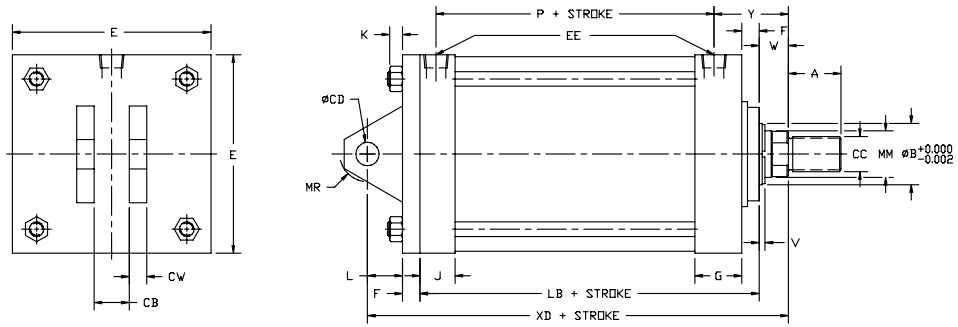

MP3

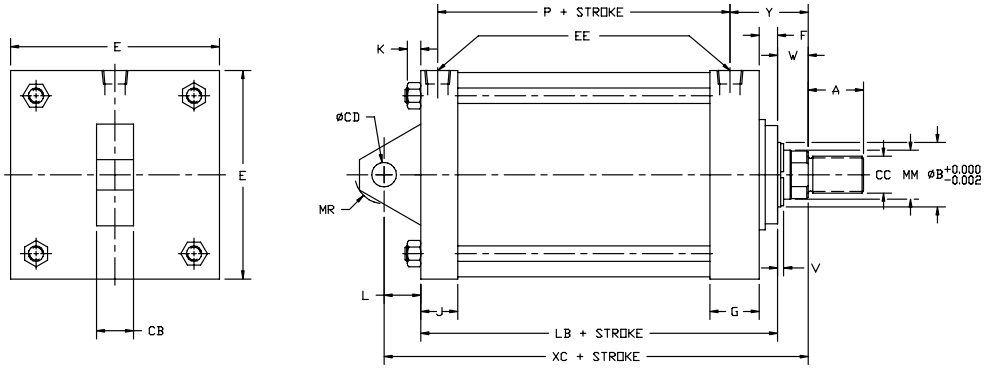

MP4

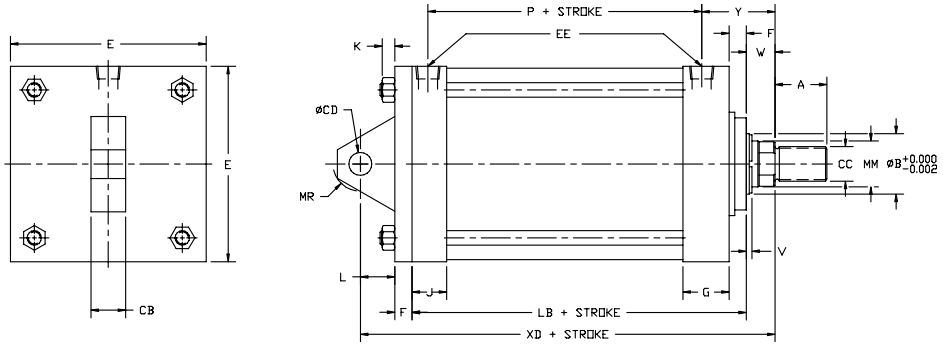

Dimensions (in)													
BORE	CB	CD	CW	E	EE (NPT)	F	G	J	K	L	MR	LB	P
8	1.50	1.00	0.75	8.50	0.75	0.75	2.00	1.50	0.56	1.50	1.19	5.88	3.25
10	2.00	1.38	1.00	10.63	1.00	0.75	2.25	2.00	0.69	2.13	1.63	7.13	4.13
12	2.50	1.75	1.25	12.75	1.00	0.75	2.25	2.00	0.69	2.25	2.13	7.63	4.63
14	2.50	2.00	1.25	14.75	1.25	0.75	2.75	2.25	0.75	2.50	2.38	8.88	5.50

Rod Thread Table

Dimenstions (in)					
Bore	Rod Φ MM	XC	XD	Y	
8	1.38	8.25	9.00	2.81	For other values please see chart on pg 11
	1.75	8.50	9.25	3.06	
	2.00	8.63	9.38	3.19	
	2.50	8.88	9.63	3.44	
10	1.75	10.38	11.13	3.13	
	2.00	10.50	11.25	3.25	
	2.50	10.75	11.50	3.50	
12	2.00	11.13	11.88	3.25	
	2.50	11.38	12.13	3.50	
	3.00	11.38	12.13	3.50	
14	2.50	12.88	13.63	3.81	
	3.00	12.88	13.63	3.81	
	3.50	12.88	13.63	3.81	

MS1

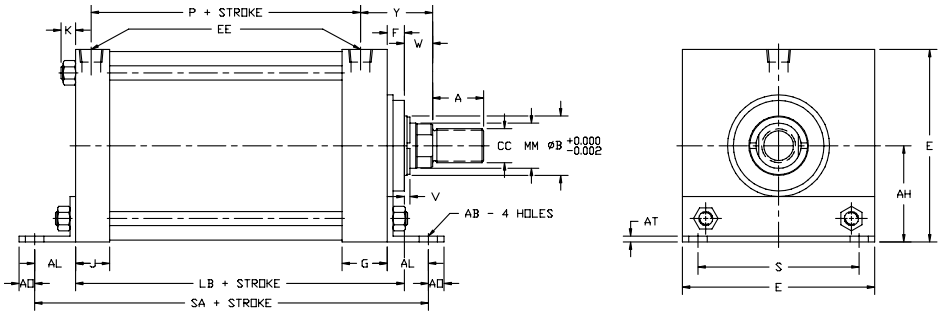

MS2

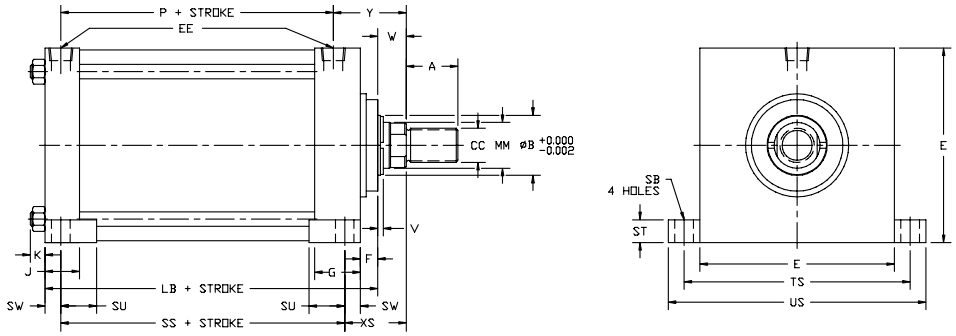

MS3

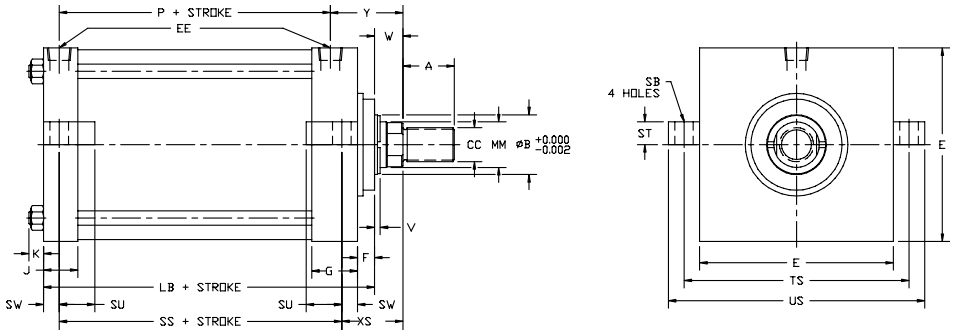

MS1

Dimensions (in)															
BORE	AB	AH	AL	AO	AT	E	EE (NPT)	F	G	J	K	LB	P	S	SA
8	0.81	4.25	1.81	0.69	0.25	8.50	0.75	0.75	2.00	1.50	0.56	5.88	3.25	7.13	8.75
10	1.06	5.31	2.13	0.88	0.25	10.63	1.00	0.75	2.25	2.00	0.69	7.13	4.13	8.88	10.63
12	1.06	6.38	2.13	0.88	0.38	12.75	1.00	0.75	2.25	2.00	0.69	7.63	4.63	11.00	11.13
14	1.31	7.38	2.44	1.06	0.38	14.75	1.25	0.75	2.75	2.25	0.75	8.88	5.50	12.63	13.00

MS2, MS3

Dimensions (in)														
BORE	SB	E	EE (NPT)	F	G	J	K	LB	P	ST	SU	SW	SS	TS
8	0.81	8.50	0.75	0.75	2.00	1.50	0.56	5.88	3.25	1.00	1.56	0.69	3.75	9.88
10	1.06	10.63	1.00	0.75	2.25	2.00	0.69	7.13	4.13	1.25	2.00	0.88	4.63	12.38
12	1.06	12.75	1.00	0.75	2.25	2.00	0.69	7.63	4.63	1.25	2.00	0.88	5.13	14.50
14	1.31	14.75	1.25	0.75	2.75	2.25	0.75	8.88	5.50	1.50	2.50	1.13	5.88	17.00

Rod Thread Table

Dimenstions (in)				
Bore	Rod Φ MM	XS	Y	
8	1.38	2.31	2.81	For other values please see chart on pg 11
	1.75	2.56	3.06	
	2.00	2.69	3.19	
	2.50	2.94	3.44	
10	1.75	2.75	3.13	
	2.00	2.88	3.25	
	2.50	3.13	3.50	
12	2.00	2.88	3.25	
	2.50	3.13	3.50	
	3.00	3.13	3.50	
14	2.50	3.38	3.81	
	3.00	3.38	3.81	
	3.50	3.38	3.81	

MS4

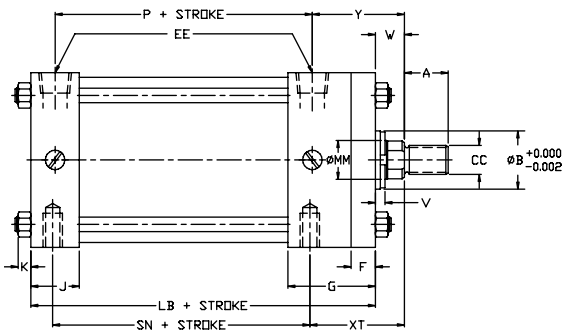

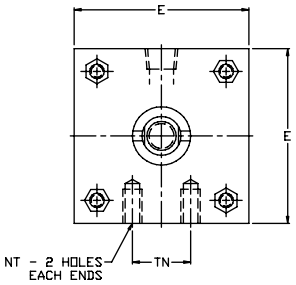

MS7

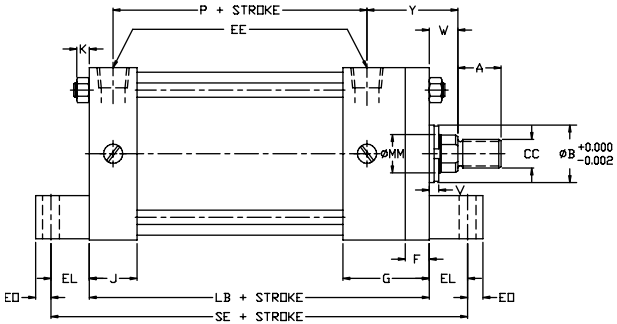

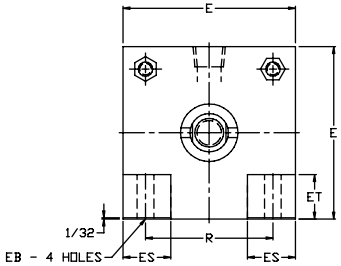

MS4

Dimensions (in)												
BORE	E	EE (NPT)	F	G	J	K	LB	P	ND	NT	SN	TN
8	8.50	0.75	0.75	2.00	1.50	0.56	5.88	3.25	1.13	¾-10	3.25	4.50
10	10.63	1.00	0.75	2.25	2.00	0.69	7.13	4.13	1.50	1-8	4.13	5.50
12	12.75	1.00	0.75	2.25	2.00	0.69	7.63	4.63	1.50	1-8	4.63	7.25
14	14.75	1.25	0.75	2.75	2.25	0.75	8.88	5.50	1.88	1¼-7	5.50	8.38

MS7

Dimensions (in)															
BORE	E	EB	EE (NPT)	EL	EO	ES	ET	F	G	J	K	LB	P	R	SE
8	8.50	0.69	0.75	1.13	0.63	2.25	2.03	0.75	2.00	1.50	0.56	5.88	3.25	6.44	7.38
10	10.63	0.81	1.00	1.31	0.63	2.75	2.69	0.75	2.25	2.00	0.69	7.13	4.13	7.92	9.00
12	12.75	0.81	1.00	1.31	0.63	3.50	3.31	0.75	2.25	2.00	0.69	7.63	4.63	9.40	9.50
14	14.75	0.56	1.25	1.50	0.75	4.00	3.81	0.75	2.75	2.25	0.75	8.88	5.50	10.90	11.13

Rod Thread Table

Dimenstions (in)				
Bore	Rod Φ MM	XT	Y	
8	1.38	2.81	2.81	For other values please see chart on pg 11
	1.75	3.06	3.06	
	2.00	3.19	3.19	
	2.50	3.44	3.44	
10	1.75	3.13	3.13	
	2.00	3.25	3.25	
	2.50	3.50	3.50	
12	2.00	3.25	3.25	
	2.50	3.50	3.50	
	3.00	3.50	3.50	
14	2.50	3.81	3.81	
	3.00	3.81	3.81	
	3.50	3.81	3.81	

MT1

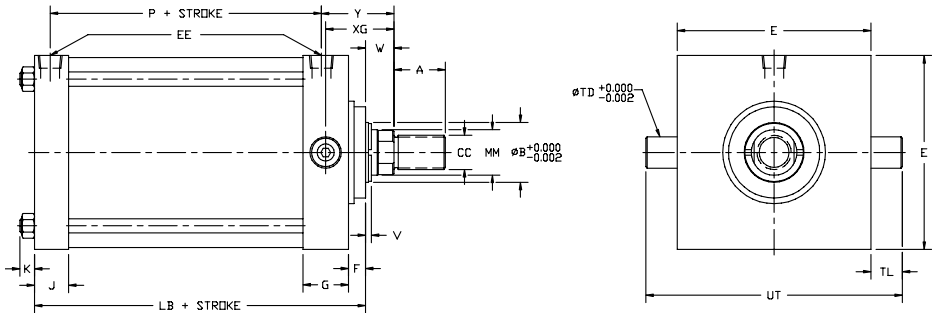

MT2

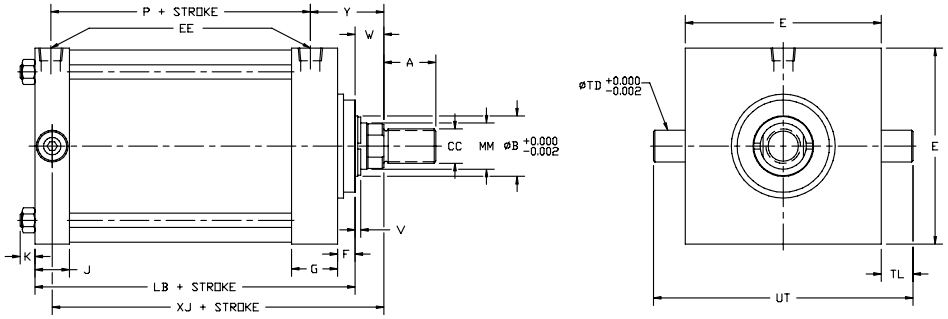

Dimensions (in)											
BORE	E	EE (NPT)	F	G	J	K	LB	P	TD	TL	UT
8	8.50	0.75	0.75	2.00	1.50	0.56	5.88	3.25	1.38	1.38	11.25
10	10.63	1.00	0.75	2.25	2.00	0.69	7.13	4.13	1.75	1.75	14.13
12	12.75	1.00	0.75	2.25	2.00	0.69	7.63	4.63	1.75	1.75	16.25
14	14.75	1.25	0.75	2.75	2.25	0.75	8.88	5.50	2.00	2.00	18.75

Rod Thread Table

Dimenstions (in)					
Bore	Rod Φ MM	XG	XJ	Y	
8	1.38	2.63	6.00	2.81	For other values please see chart on pg 11
	1.75	2.88	6.25	3.06	
	2.00	3.00	6.38	3.19	
	2.50	3.25	6.63	3.44	
10	1.75	3.00	7.25	3.13	
	2.00	3.13	7.38	3.25	
	2.50	3.38	7.63	3.50	
12	2.00	3.13	7.88	3.25	
	2.50	3.38	8.13	3.50	
	3.00	3.38	8.13	3.50	
14	2.50	3.63	9.25	3.81	
	3.00	3.63	9.25	3.81	
	3.50	3.63	9.25	3.81	

MT4

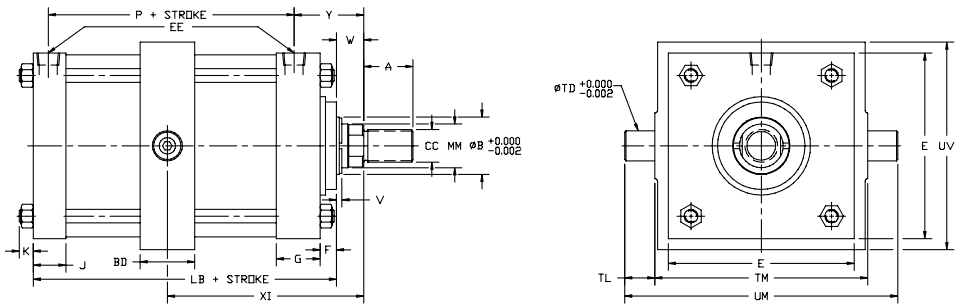

MX1, MX2, MX3

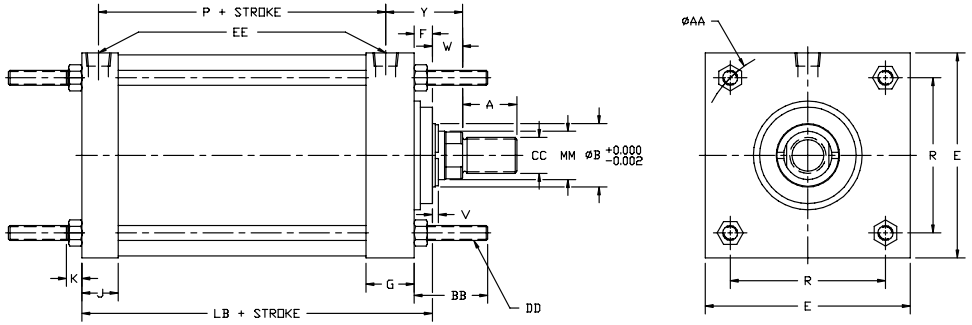

MT4

Dimensions (in)														
BORE	BD	E	EE (NPT)	F	G	J	K	LB	P	TD	TL	TM	UM	UW
8	2.50	8.50	0.75	0.75	2.00	1.50	0.56	5.88	3.25	1.38	1.38	9.75	12.50	9.50
10	3.00	10.63	1.00	0.75	2.25	2.00	0.69	7.13	4.13	1.75	1.75	12.00	15.50	11.75
12	3.00	12.75	1.00	0.75	2.25	2.00	0.69	7.63	4.63	1.75	1.75	14.00	17.50	13.75
14	3.50	14.75	1.25	0.75	2.75	2.25	0.75	8.88	5.50	2.00	2.00	16.25	20.25	16.00

MX1, MX2, MX3

Dimensions (in)												
BORE	AA	BB	DD	E	EE (NPT)	F	G	J	K	LB	P	R
8	9.10	2.31	⅝-18	8.50	0.75	0.75	2.00	1.50	0.56	5.88	3.25	6.44
10	11.20	2.69	¾-16	10.63	1.00	0.75	2.25	2.00	0.69	7.13	4.13	7.92
12	13.30	2.69	¾-16	12.75	1.00	0.75	2.25	2.00	0.69	7.63	4.63	9.40
14	15.40	3.19	⅞-14	14.75	1.25	0.75	2.75	2.25	0.75	8.88	5.50	10.90

Rod Thread Table

Dimenstions (in)				
Bore	Rod Φ MM	Min XI	Y	
8	1.38	4.94	2.81	For other values please see chart on pg 11
	1.75	5.19	3.06	
	2.00	5.31	3.19	
	2.50	5.56	3.44	
10	1.75	5.69	3.13	
	2.00	5.81	3.25	
	2.50	6.06	3.50	
12	2.00	5.81	3.25	
	2.50	6.06	3.50	
	3.00	6.06	3.50	
14	2.50	6.81	3.81	
	3.00	6.81	3.81	
	3.50	6.81	3.81	

MP5

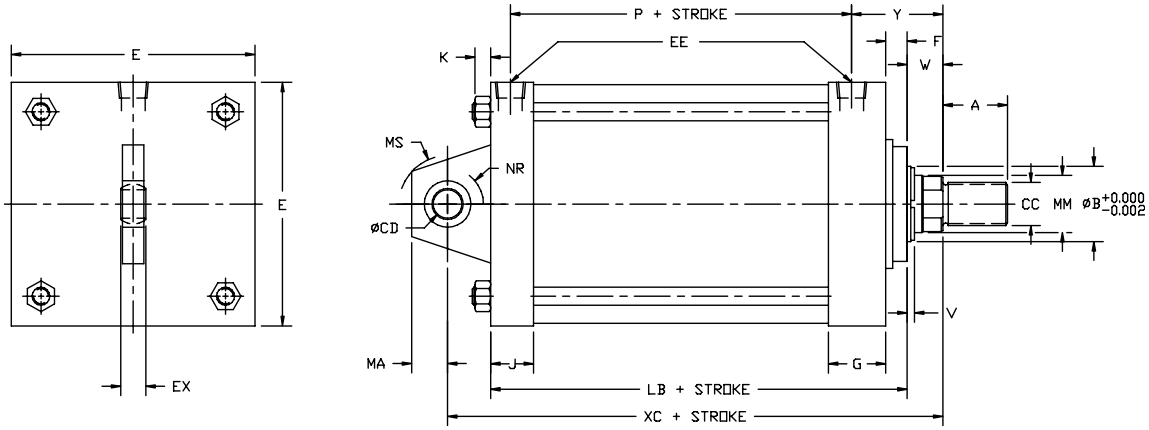

MP5

Dimensions (in)													
BORE	CD	E	EE (NPT)	EX	F	G	J	K	LB	P	MA	MS	NR
8	1.00	8.50	0.75	0.88	0.75	2.00	1.50	0.56	5.88	3.25	1.25	1.69	1.25
10	1.38	10.63	1.00	1.19	0.75	2.25	2.00	0.69	7.13	4.13	1.88	2.44	1.63
12	1.75	12.75	1.00	1.53	0.75	2.25	2.00	0.69	7.63	4.63	2.50	2.88	2.06
14	2.00	14.75	1.25	1.75	0.75	2.75	2.25	0.75	8.88	5.50	2.50	3.31	2.38

Rod Thread Table

Dimenstions (in)					
Bore	Rod Φ MM	XC	LD	Y	
8	1.38	2.63	5.63	2.81	For other values please see chart on pg 11
	1.75	2.88	5.63	3.06	
	2.00	3.00	5.63	3.19	
	2.50	3.25	5.63	3.44	
10	1.75	3.00	6.63	3.13	
	2.00	3.13	6.63	3.25	
	2.50	3.38	6.63	3.50	
12	2.00	3.13	7.13	3.25	
	2.50	3.38	7.13	3.50	
	3.00	3.38	7.13	3.50	
14	2.50	3.63	8.63	3.81	
	3.00	3.63	8.63	3.81	
	3.50	3.63	8.63	3.81	

Double Rod Ended

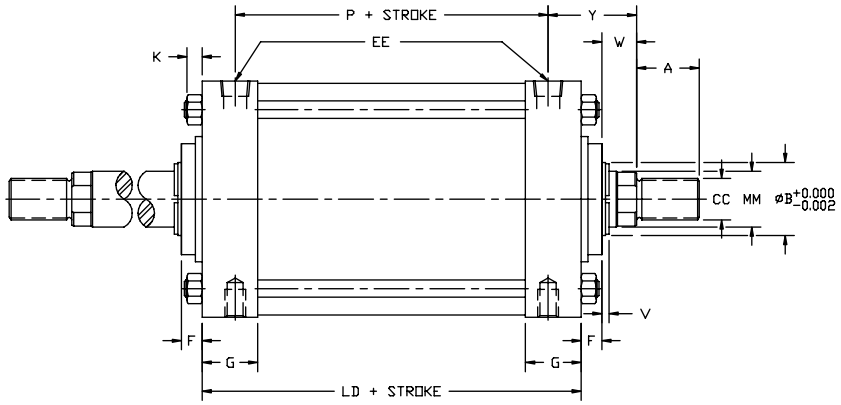

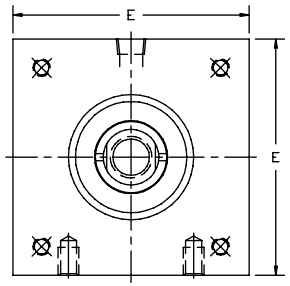

Actuator Dimensions (in)								
BORE	E	EE (NPT)	F	G	J	K	LD	P
8	8.50	0.75	0.75	2.00	1.50	0.56	5.63	3.25
10	10.63	1.00	0.75	2.25	2.00	0.69	6.63	4.13
12	12.75	1.00	0.75	2.25	2.00	0.69	7.13	4.63
14	14.75	1.25	0.75	2.75	2.25	0.75	8.63	5.50

How to Order

SERIES

PA - Aluminum
PS - Steel
PC - Stainless Steel

BORE SIZE

C - 1 1/2"
D - 2"
E - 2 1/2"
G - 3 1/4"
H - 4"
K - 5"
L - 6"
M - 7"
N - 8"
P - 10"
R - 12"
S - 14"

ROD DIAMETER

C - 5/8"
E - 1"
G - 1 3/8"
H - 1 3/4"
J - 2"
K - 2 1/2"
L - 3"
M - 3 1/2"

ROD THREAD STYLE

N - Standard Thread
M - Metric

ROD THREAD SIZE

1 - Small Male
2 - Intermediate Male
3 - Full Male
4 - Small Female
P - Plain (Use with style N thread)

CUSHIONS

2 - Non adjustable both ends
3 - Non adjustable head end
4 - Non adjustable cap end
5 - Adjustable both ends
6 - Adjustable head end
7 - Adjustable cap end
8 - None

CUSHIONS POS

- Omit if non Cushion
- Cushion on one end CX
  X denotes position
  ex: C1 = Pos 1
- Cushion on one end CXX
  XX denotes position
  ex: C12 = Pos 1 head Pos 2 Cap

APPLICATION MODS

- - Omit if not required
GR2 - Metallic rod scrapper
P2 - Magnetic pioston
S5 - Hydraulic use (250psi max)
S5 not available with cushions
List application mods alpha numerically

SEALS

N - Standard Seals
F - High Temp
L - Low Temp

PORTS

SXX - SAE
NXX - NPT
TXX - BSPT

XX denotes position
ex: 12 = Pos 1 head, Pos 2 Cap

SPECIAL OPTIONS

- - Omit if not required
A# - Thread extension ex:A2.50 = A = 2.50"
BN - Neoprene Rod Boot (-46C to 107C)*
BS - Silicone Rod Boot (-46C to 266C)*
C1 - Polyurethane Paint
C2 - Nickel Plating
M2 - Stainless Steel tie rods
M3 - 316 Stainless Steel piston rod
ST - Stop Tube
W# - Rod Extension ex: W2.50 = W = 2.50"
XI - For T4 mount only
Modifications to be listed alphanumerically after the stroke
ex:PSHEN15C22NN11X012.00A2.5C1W5.5

**Cylinders with rod boots require special W*
W=Stroke x 0.125 + 3/4 + std W

MOUNTINGS

P1 MP1 mount: Female clevis
P2 MP2 mount: Detachable female clevis
P3 MP3 mount: Male clevis
P4 MP4 mount: Detachable male clevis
P5 MP5 mount: Spherical bearing
P6 MP6 mount: Detahcabel spherical bearing
E3 ME3 mount: Head square
E4 ME4 mount: Cap square
F1 MF1 mount: Head rectangular flange
F2 MF2 mount: Cap rectangular flange
F5 MF5 mount: Head square flange
F6 MF6 mount: Cap square flange
X1 MX1 mount: Extended tie rod both ends
X3 MX3 mount: Extended tie rod head end
X2 MX2 mount: Extended tie rod cap end
X0 MX0 mount: No mount
S1 MS1 mount: Side end angles
S2 MS2 mount: Side lugs
SC2 MS2 mount: Side lugs, thrust key on cap end
SH2 MS2 mount: side lugs, thrust key on head end
S3 MS3 mount: Centerline lugs
S4 MS4 mount: Side tapped
S7 MS7 mount: Side end lugs
T1 MT1 mount: Head end trunnion
T1S MT1 mount: Steel Head with welded trunnion pins
T1I MT1 mount: Steel Head with integral trunnion pins
T2 MT2 mount: Cap end trunnion
T2S MT2 mount: Steel Cap with welded trunnion pins
T2I MT2 mount: Steel Cap with integral trunnion pins
T4 MT4 moung: Intermediate trunnions
(Specify XI at end of stroke)

EXAMPLE

PS H E N1 5 C23 N N11 P1 12.0

- *12 " Stroke*
- *Female Clevis mounting (MP1)*
- *NPT Pos 1 Both ends*
- *Standard Seals*
- *Cushion Pos 2 Head end, Pos 3 Cap end*
- *Adjustable Cushions on both ends*
- *Small Male Rod End*
- *1" Rod*
- *4" Bore*
- *PS Series*

Related materials

Visit our website to download or request a printed catalogue.

Solutions Include:

Valve Actuators

Fail-Safe Systems

Digital Process Control Panels

Pneumatic Process Control Panels

For sales and technical information, Contact us at:

Head Office/Factory:
6194 Notre Dame West
Montreal, Quebec H4C 1V4
TOLL-FREE: 855-341-3415

LATAM Sales Office:
T: +1-514-553-2328
info@cowandynamics.com

/cowandynamics
/company/cowan-dynamics
/cowandynamics
/+cowandynamics

www.cowandynamics.com

Published December 10, 2021